DWG NO.	SH
EHSS00-1013	1

REVISIONS

ZONE	LTR	DESCRIPTION	DATE	APPROVED
	–	INITIAL RELEASE	08-27-04	DK

THIS DRAWING HAS BEEN GENERATED AND IS MAINTAINED BY A CAD SYSTEM. CHANGES SHALL ONLY BE INCORPORATED AS DIRECTED BY THE COGNIZANT DESIGN ACTIVITY.

NOTES:

1. MATERIAL: –101 AND –102, UV STABILIZED UHMW POLYETHYLENE SHEET, 1/4 THICK.
2. MATERIAL: –201 AND –202, ACETAL RESIN 500, DELRIN BAR IAW LP–392, 1.50 WIDE X 1.00 THK.
3. IDENTIFY WITH PART NUMBER "EHSS00–1013" AND APPLICABLE DASH NUMBER BY TAG IAW MIL–STD–130.
4. FOR SLOTTED HOLE DIMENSION MARKED "B", USE DETAIL "A" SHOWN ON SHEET 2, ZONE A2.

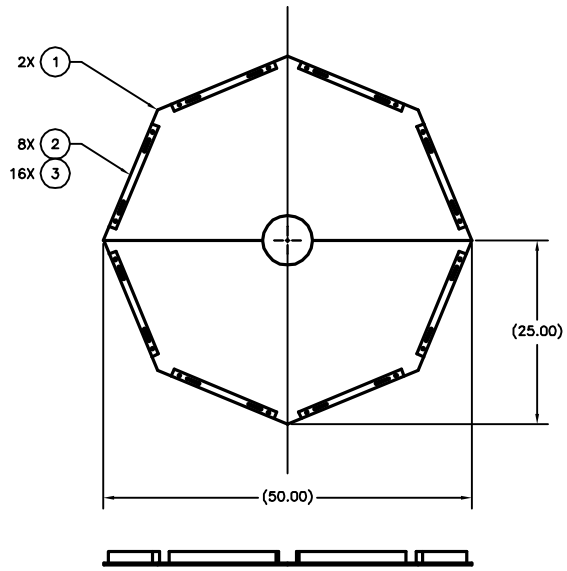

–1

QTY REQD		CAGE CODE	PART OR IDENTIFYING NUMBER	DESCRIPTION OR NOMENCLATURE	MATERIAL/SPEC/REF DESC	FIND NO.
	16		MS51959–83	SCREW, FLH, SCH, 82°	(1/4–20 X 1.00)	3
	8		–201	CABLE TRAY ASSY, SIDE		2
	2		–101	CABLE TRAY ASSY, PLATE		1
	–1					

PARTS LIST

Do not distribute to DTIC or other data depositories.

Distribution Statement E: Distribution authorized to DoD components only; Premature Dissemination; 08/13/2004. Other requests shall be referred to Commander, Space And Naval Warfare Systems Center, San Diego CA 92152–5000

2	1	SHEET	REVISION STATUS OF SHEETS

EHSS00–0100	EHSS
NEXT ASSY	USED ON
APPLICATION	

INTERPRET DRAWING IN ACCORDANCE WITH ASME Y14.100, ASME Y14.24, ASME Y14.34, ASME Y14.35, ASME Y14.5M–1994

DO NOT SCALE THIS DRAWING

UNLESS OTHERWISE SPECIFIED: DIMENSIONS ARE IN INCHES. BREAK ALL EDGES .03 MAX. REMOVE ALL BURRS. TOLERANCES ARE: .XX ± .03 .XXX ± .010 ANGLES ± .5° FILLETS MAX. SURFACE ROUGHNESS 125√

RELEASED DATE

APPROVED		
APPROVED		
CHECKED		
PREPARED	E LARDIN	040813

PROJECT NUMBER COGNIZANT CODE

APPROVED FOR BY DIRECTION

SPAWAR SPACE AND NAVAL WARFARE SYSTEMS CENTER SAN DIEGO, CA 92152–5000

CABLE TRAY ASSEMBLY

SIZE	CAGE CODE	DRAWING NUMBER	REV
D		EHSS00–1013	–

SCALE 1/8 SHEET 1 OF 2

EHSS00–1013_01_–.DWG 08/27/2004

DWG NO.	SH
EHSS00-1013	2

REVISIONS

ZONE	LTR	DESCRIPTION	DATE	APPROVED
	–	INITIAL RELEASE	08-27-04	DK

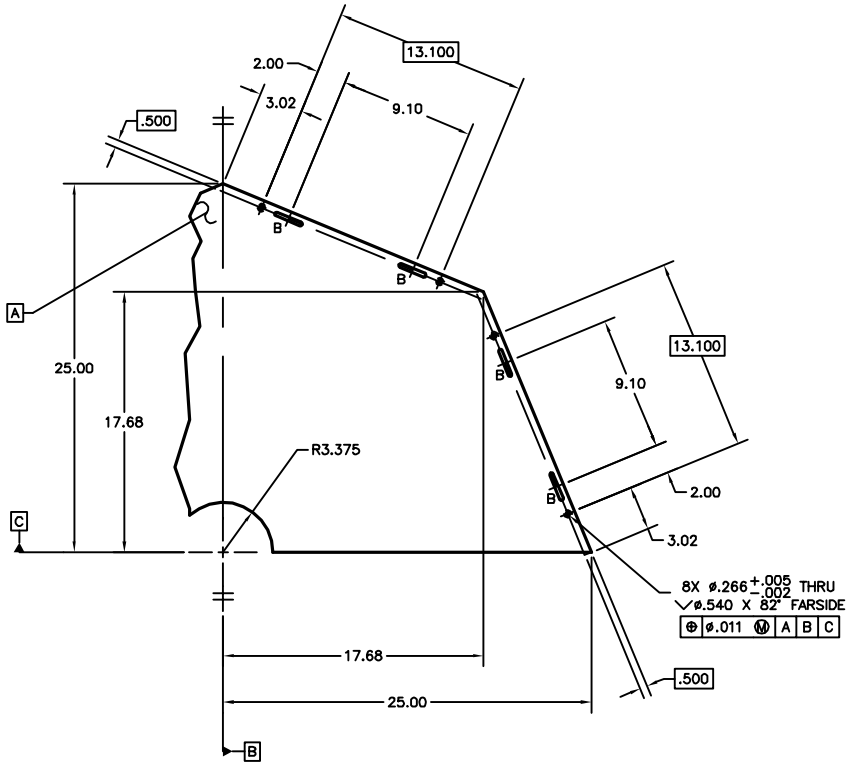

–101 CABLE TRAY ASSEMBLY, PLATE

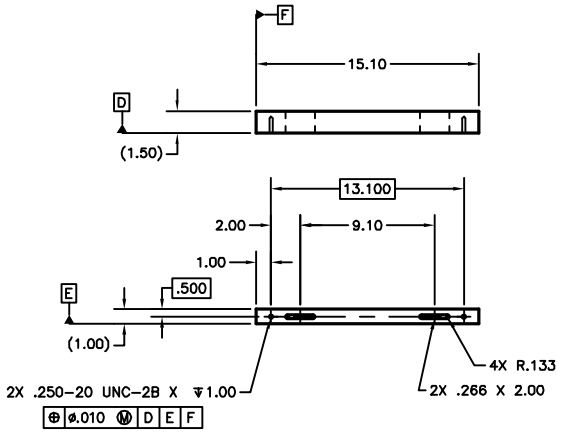

–201 CABLE TRAY ASSEMBLY, SIDE

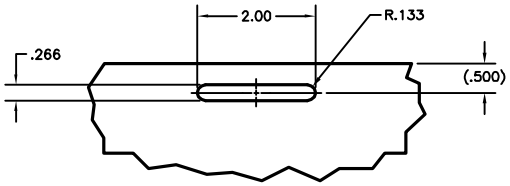

DETAIL "A" 4
SCALE : 1/1

SIZE	CAGE CODE	DRAWING NUMBER	REV
D		EHSS00-1013	–
SCALE 1/4		SHEET 2	

SH2-D.DWG REV 2004

EHSS00-1013_02_–.DWG 08/27/2004