DWG NO. EHSS00-1009 SH 1

REVISIONS				
ZONE	LTR	DESCRIPTION	DATE	APPROVED
	–	INITIAL RELEASE	9-15-04	DK

THIS DRAWING HAS BEEN GENERATED AND IS MAINTAINED BY A CAD SYSTEM. CHANGES SHALL ONLY BE INCORPORATED AS DIRECTED BY THE COGNIZANT DESIGN ACTIVITY.

NOTES:

1. IDENTIFY WITH PART NUMBER "EHSS00-1009" AND APPLICABLE DASH NUMBER BY TAG IAW MIL-STD-130.
2. FINISH: GALVANIZE PER ASTM D2092, AFTER WELD. PARTS TO BE INSPECTED BY SSC PRIOR TO PLATING.
3. MATERIAL: STEEL PER ASTM A36.

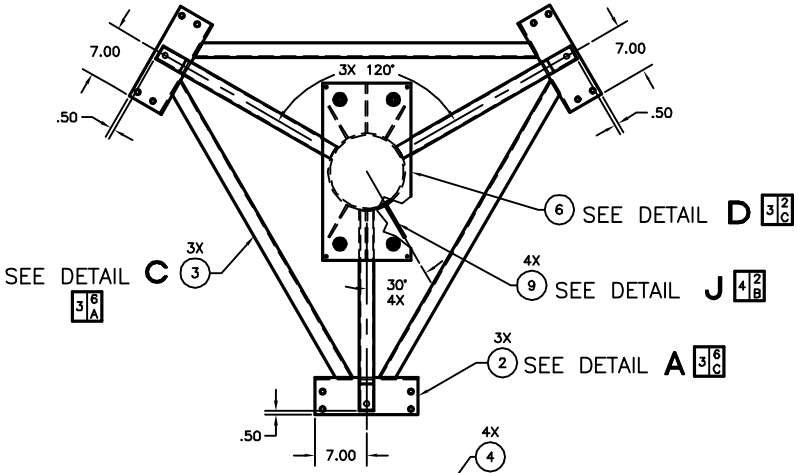

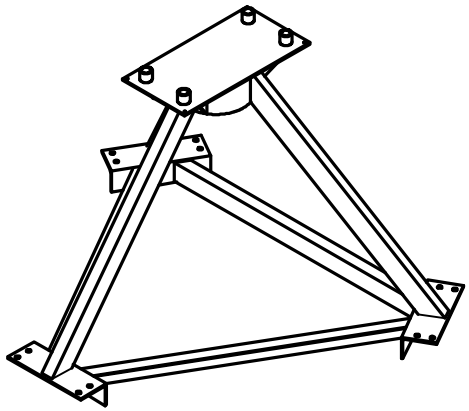

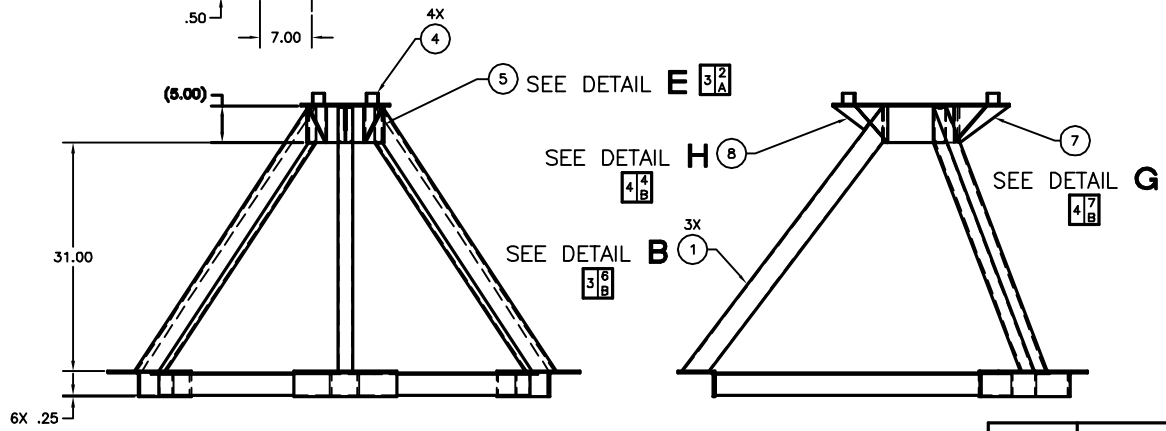

QTY REQD	CAGE CODE	PART OR IDENTIFYING NUMBER	DESCRIPTION OR NOMENCLATURE	MATERIAL/SPEC/REF DESG	FIND NO.
4			GUSSETS	5.00 X 5.00 X .25 THK	9
1			GUSSETS	6.75 X 3.25 X .25 THK	8
1			GUSSETS	5.00 X 6.75 X .25 THK	7
AR			PLATE, STEEL	.25 THK	6
1			TUBE, STEEL, ROUND	10.50 OD X 10.00 ID X .25 THK X 5.00 L	5
4			PIPE, STEEL, ROUND, SCH 40	1.00 NOM. X 1.50 L	4
AR			ANGLE, STEEL	3.00 X 2.00 X .18 THK	3
AR			ANGLE, STEEL	5.00 X 3.50 X .25 THK	2
AR			TUBE, STEEL, RECTANGULAR	3.00 X 2.00 X .125 THK	1

PARTS LIST

Do not distribute to DTIC or other data depositories.

Distribution Statement E: Distribution authorized to DoD components only; Premature Dissemination; 02/12/2004. Other requests shall be referred to Commander, Space And Naval Warfare Systems Center, San Diego CA 92152-5000

-1

REVISION SHEET	REVISION STATUS OF SHEETS
– – – –	
4 3 2 1	

EHSS00-0100	EHSS
NEXT ASSY	USED ON
APPLICATION	

INTERPRET DRAWING IN ACCORDANCE WITH ASME Y14.100, ASME Y14.24, ASME Y14.34, ASME Y14.35, ASME Y14.5M-1994

DO NOT SCALE THIS DRAWING

UNLESS OTHERWISE SPECIFIED: DIMENSIONS ARE IN INCHES. BREAK ALL EDGES .03 MAX. REMOVE ALL BURRS. TOLERANCES ARE: .XX ± .03 .XXX ± .010 ANGLES ± .5° FILLETS MAX. SURFACE ROUGHNESS 125√

RELEASED DATE

APPROVED		
APPROVED		
CHECKED		
PREPARED	R CORONEL	040212
PROJECT NUMBER COGNIZANT CODE		
APPROVED FOR BY DIRECTION		

SPAWAR SPACE AND NAVAL WARFARE SYSTEMS CENTER SAN DIEGO, CA 92152-5000

RADAR MOUNT ASSEMBLY

SIZE	CAGE CODE	DRAWING NUMBER	REV
D		EHSS00-1009	–

SCALE 1/8 SHEET 1 OF 4

SH-0.000 REV 2004

EHSS00-1009_01_-.DWG 09/15/2004

DWG NO.	SH
EHSS00-1009	2

REVISIONS

ZONE	LTR	DESCRIPTION	DATE	APPROVED
	–	INITIAL RELEASE	9-15-04	DK

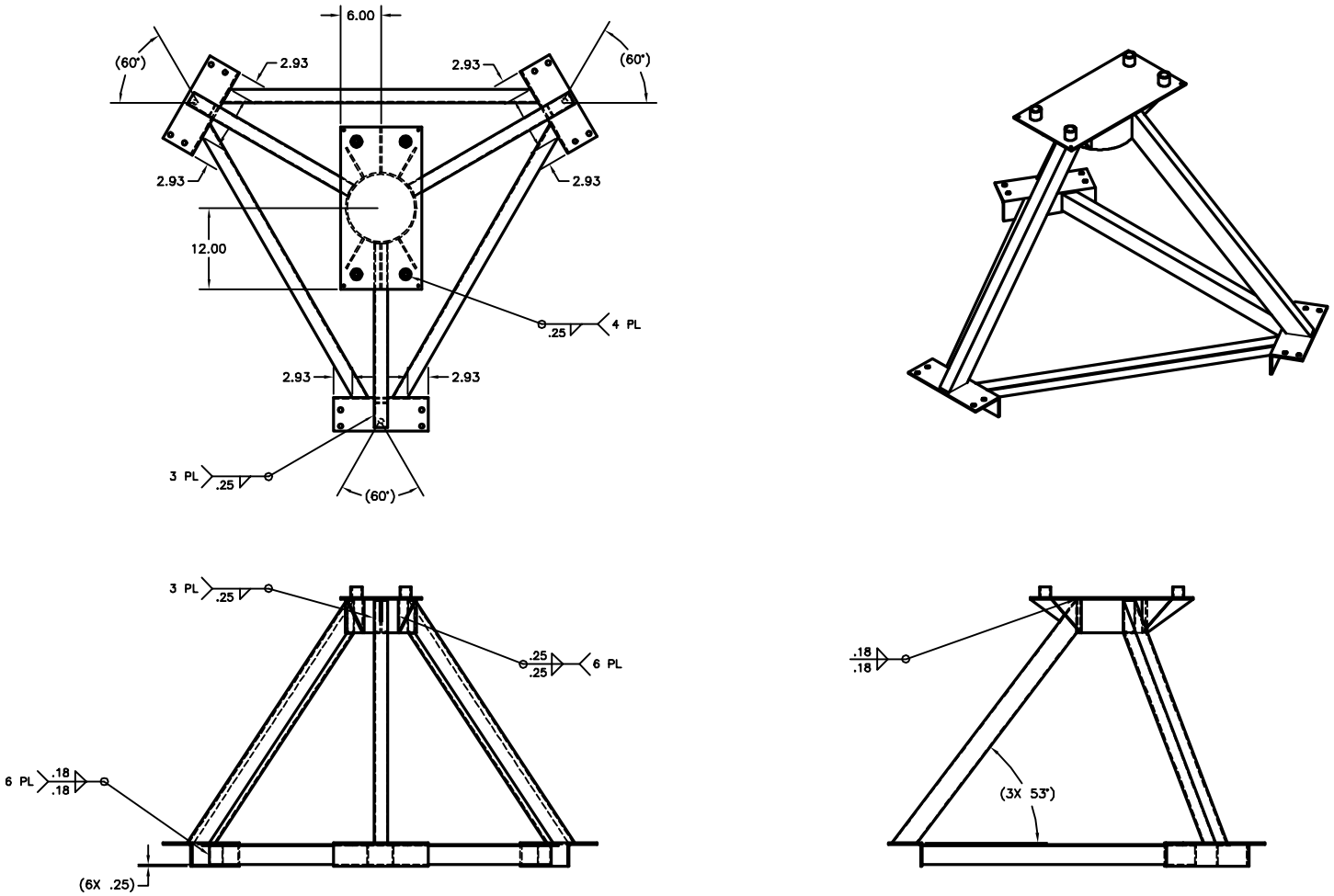

WELDMENT

SIZE	CAGE CODE	DRAWING NUMBER	REV
D		EHSS00-1009	-
SCALE 1/8		SHEET 2	

SH2-D.DWG REV 2004

EHSS00-1009_02_-.DWG
09/15/2004

DWG NO.	SH
EHSS00-1009	3

REVISIONS

ZONE	LTR	DESCRIPTION	DATE	APPROVED
	–	INITIAL RELEASE	9-15-04	DK

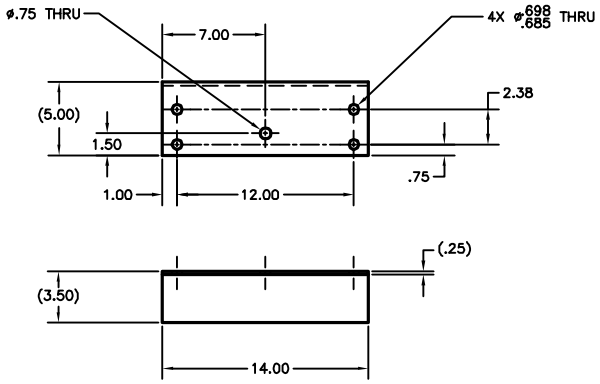

DETAIL A 1 5 C

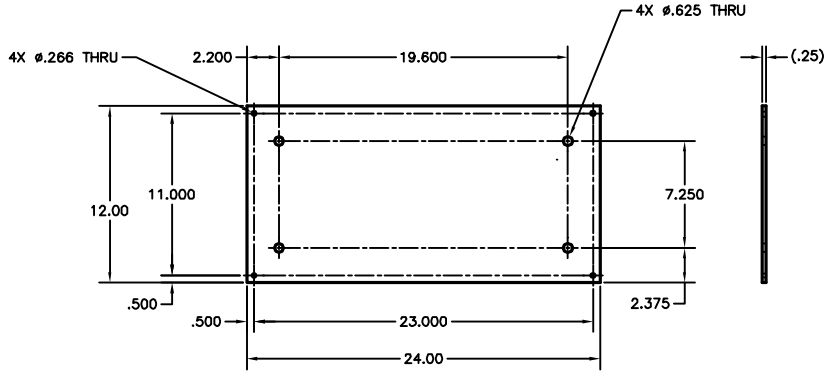

DETAIL D 1 5 C

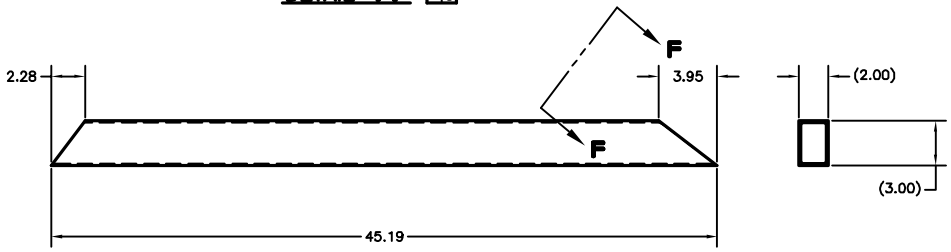

DETAIL B 1 5 B

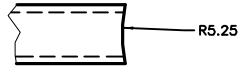

VIEW F-F
SCALE : NONE

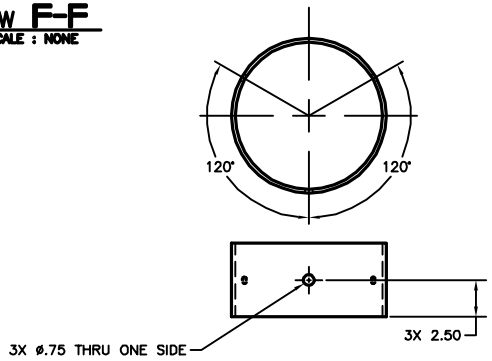

DETAIL E 1 5 B

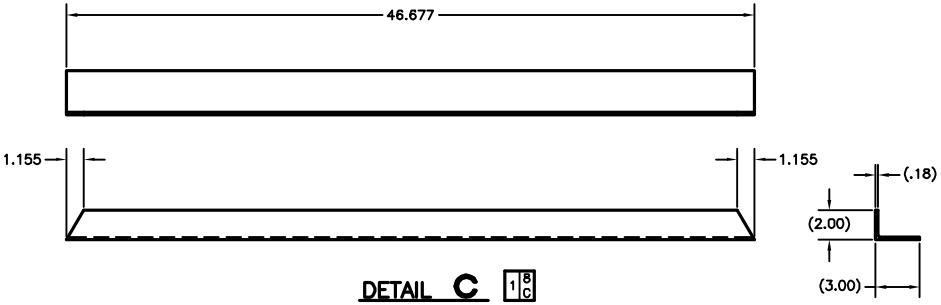

DETAIL C 1 8 C

SIZE	CAGE CODE	DRAWING NUMBER	REV
D		EHSS00-1009	-
SCALE 1/4		SHEET 3	

SH2-D.DWG REV 2004

EHSS00-1009_03_-.DWG
09/15/2004

DWG NO.	SH
EHSS00-1009	4

REVISIONS

ZONE	LTR	DESCRIPTION	DATE	APPROVED
	–	INITIAL RELEASE	9-15-04	DK

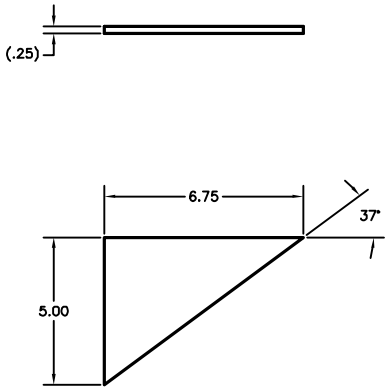

DETAIL G 1 3 B

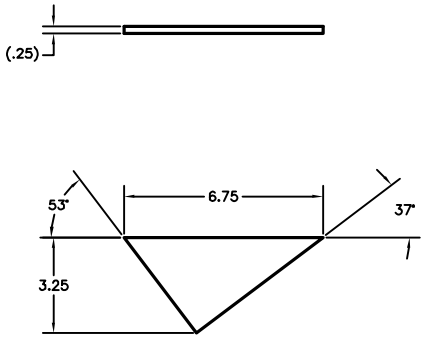

DETAIL H 1 5 B

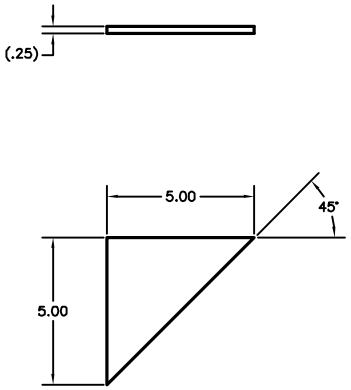

DETAIL J 1 5 C

SIZE	CAGE CODE	DRAWING NUMBER	REV
D		EHSS00-1009	-
SCALE 1/2		SHEET 4	

SH2-D.DWG REV 2004

EHSS00-1009_04_-.DWG
09/15/2004