REVISIONS				
ZONE	REV	DESCRIPTION	DATE	APPROVED

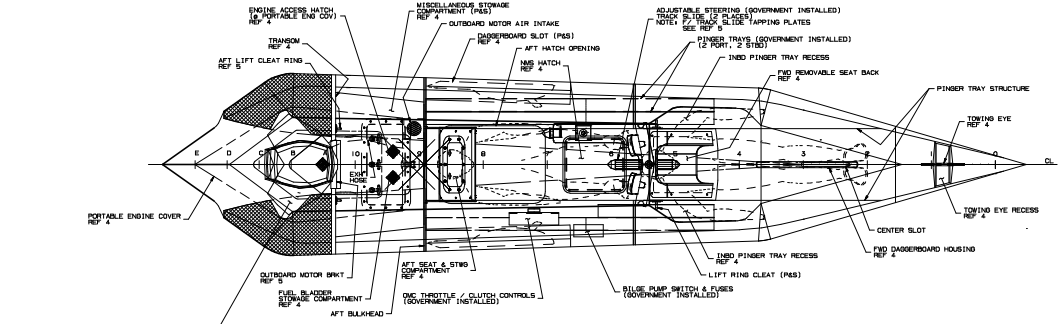

PLAN VIEW (INTERIOR)

SCALE: 1 1/2" = 1'-0"

NOTE: FLOATATION FOAM REMOVED (AS REQUIRED) IN WAY OF OUTBOARD MOTOR HEAD TO ALLOW FULL TURNING RADIUS

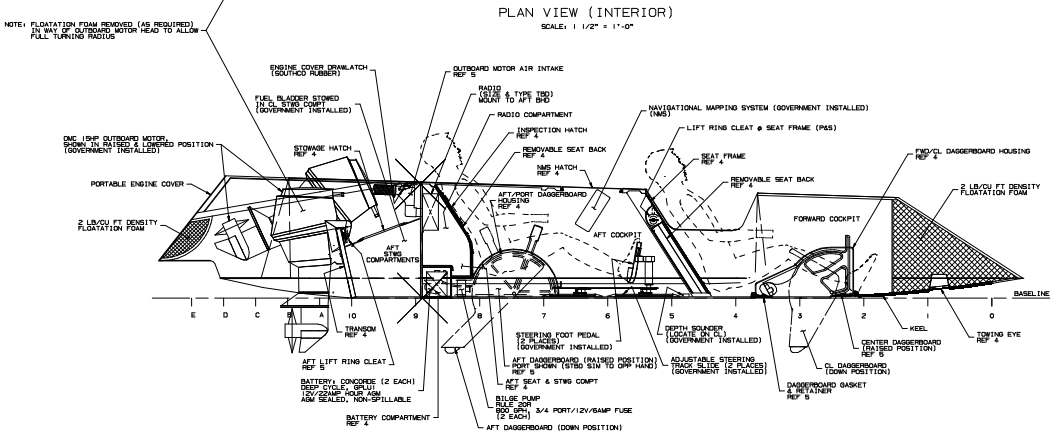

INBOARD PROFILE (INTERIOR)

SCALE: 1 1/2" = 1'-0"

REF DWG.	DOCUMENT TITLE	DOCUMENT NO.
5	MISC DETAILS	LVC/MKII-501-23301105
4	STRUCTURAL PLAN AND DETAILS	LVC/MKII-105-23301104
3	THIS DRAWING	LVC/MKII-104-23301103
2	CURVES OF FORM	NOT USED
1	LINES AND OFFSETS	LVC/MKII-101-23399101

DATA LIST

CONTRACT DRAWING

GARDEROOD DIVISION, ROCKLAND DEPT. OF PUBLIC WORKS, ROCKLAND DEPT. OF PUBLIC WORKS (IN CONJUNCTION WITH) 1 ROCKLAND PLAZA ROCKLAND, MAINE 04841 SUFFOLK, VA 23435-2600	DEPARTMENT OF THE NAVY NAVAL SEA SYSTEMS COMMAND WASHINGTON, D.C. 20362
18 FOOT EXB-WORKBOAT ARRANGEMENT PLAN AND PROFILE	
ARRGT. PLAN AND PROFILE	
SIZE / CAGE CODE: H55711	SHT. 101 / SHEET 1 OF 2
DRAWING NO. 23301105	REV
SCALE: AS NOTED	

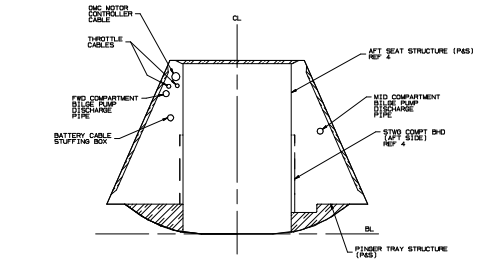

NOTE: EXACT LOCATION OF WIRING & CABLES TO BE DETERMINED AT TIME OF INSTALLATION.

SECTION @ AFT BHD

LOOKING AFT
(1 1/4" FWD STA 9)
SCALE: 1 1/2" = 1'-0"

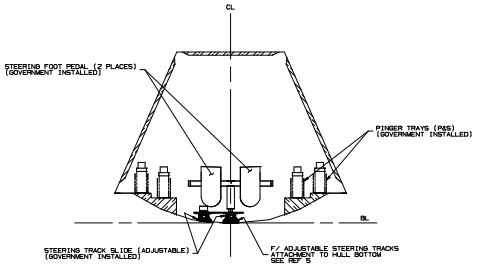

STATION 6

LOOKING AFT
SCALE: 1 1/2" = 1'-0"

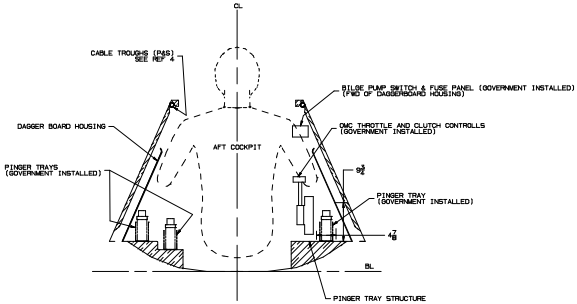

STATION 8

LOOKING FORWARD
SCALE: 1 1/2" = 1'-0"

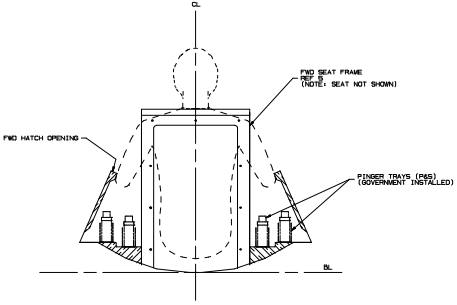

STATION 4

LOOKING AFT
SCALE: 1 1/2" = 1'-0"

NAVAL SURFACE WARFARE CTR CORMANT CRAFT DEPARTMENT	TITLE: SHEET 2 OF 2	CAGE CODE H5371	SIZE A	CODE 101	NSWC-CD DWG NO. 2330108 REV
PREPARED BY M. STAFFORD					SHEET 2 OF 2
TRACED BY	SCALE: AS NOTED				

REVISIONS				
ZONE	REV	DESCRIPTION	DATE	APPROVED

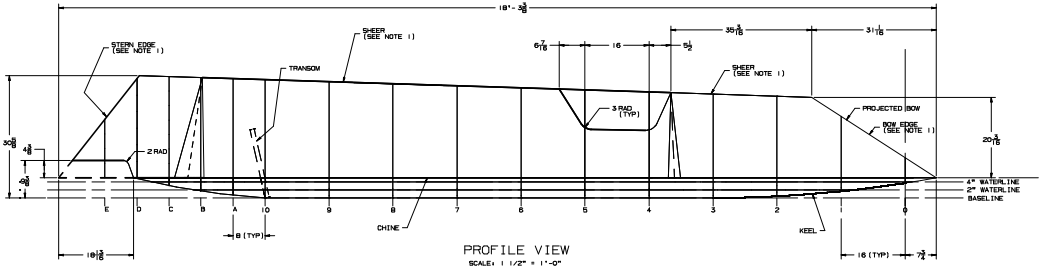

PROFILE VIEW

SCALE: 1 1/2" = 1'-0"

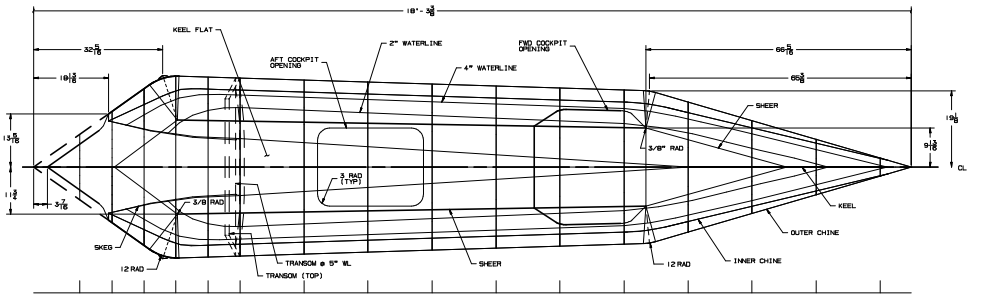

HALFBREADTH PLAN

SCALE: 1 1/2" = 1'-0"

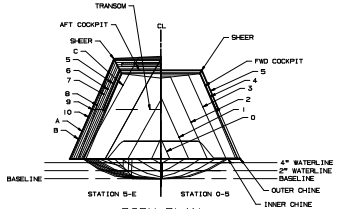

BODY PLAN

SCALE: 1 1/2" = 1'-0"

NOTE: PROJECTED BOW, SHEER AND STERN EDGE CONSTRUCTION LINES SHOWN. PROVIDE RADII AS FOLLOWS:
BOW EDGE.....3/8" RADIUS
STERN EDGE.....3/8" RADIUS
SHEER EDGES....3/8" RADIUS

NO.	DOCUMENT TITLE	DOCUMENT NO.
5	MISC DETAILS	LVC/MKII-501-23301105
4	STRUCTURAL PLAN AND DETAILS	LVC/MKII-105-23301104
3	ARRGT PLAN AND INBD PROFILE	LVC/MKII-104-23301103
2	CURVES OF FORM	NOT USED
1	THIS DRAWING	LVC/MKII-101-23301101

DATA LIST

CONTRACT DRAWING

CARDEROCK DIVISION, NAVAL SURFACE WARFARE CENTER COMBATANT CRAFT ENGINEERING DEPARTMENT (CCE) 118 LAND WAR AVENUE SUITE 201 SUFFOLK, VA 23435-2699	DEPARTMENT OF THE NAVY NAVAL SEA SYSTEMS COMMAND WASHINGTON, DC 20362
PROJ MANAGER: CDR STAFFORD	18 FOOT EXB-WORKBOAT LINES & OFFSETS
DWG NUMBER: H53711	LINES AND OFFSETS
SIZE: D	CODE IDENT: 80021
CODE: 101	DWG NO: 23301101
SCALE: AS NOTED	SHEET 1 OF 5

HULL / TABLE OF OFFSETS

NOTE: OFFSETS GIVEN IN (FEET-INCHES-SIXTEENTHS)

STATIONS	0	1	2	3	4	5	6	7	8	9	10	A	B	C	D	E
HALF BREADTHS FORM CENTERLINE																
OUTER CHINE	0-2-3	0-8-15	0-11-11	1-4-8	1-7-5	1-7-13	1-8-5	1-8-13	1-8-5	1-8-13	1-10-5	1-10-5	1-10-13	1-7-5	1-1-14	0-0-0
INNER CHINE	0-2-3	0-5-0	0-8-13	1-1-11	1-4-5	1-4-13	1-5-5	1-5-13	1-5-5	1-5-13	1-7-5	1-7-5	1-7-3	1-3-10	0-11-15	0-0-0
4" WATERLINE	0-0-7	0-4-7	0-5-5	1-0-0	1-2-11	1-3-12	1-3-13	1-4-5	1-4-15	1-5-5	1-5-1	1-5-4	1-5-1	1-1-1	0-0-0	0-0-0
2" WATERLINE	0-0-0	0-0-14	0-4-11	0-5-0	0-10-14	0-11-5	1-0-4	1-0-14	1-1-5	1-2-4	1-2-15	1-2-4	0-11-10	0-0-0	0-0-0	0-0-0
KEEL FLAT/SKEG	0-0-0	0-0-0	0-0-0	0-0-0	0-1-0	0-2-0	0-3-1	0-4-1	0-5-1	0-5-2	0-7-2	0-7-4	0-8-3	0-8-6	0-11-6	0-0-0
SKEG TOP	0-0-0	←								→	0-0-0	0-7-2	0-8-0	0-8-6	0-0-0	0-0-0
HEIGHTS ABOVE BASELINE																
OUTER CHINE	0-5-0	←													→	0-5-0
INNER CHINE	0-5-0	←													→	0-5-0
KEEL FLAT/SKEG	0-3-12	0-1-11	0-0-7	0-0-0	←					→	0-0-0	0-0-11	0-1-11	0-3-1	0-4-13	0-0-0
SKEG TOP	0-0-0	←								→	0-0-0	←	0-0-0	→	0-0-0	0-0-0

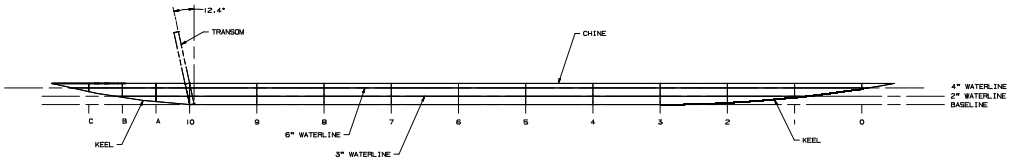

PROFILE VIEW

SCALE: 1 1/2" = 1'-0"

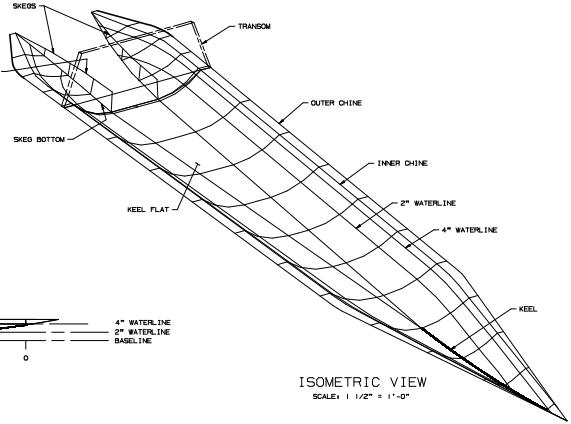

ISOMETRIC VIEW

SCALE: 1 1/2" = 1'-0"

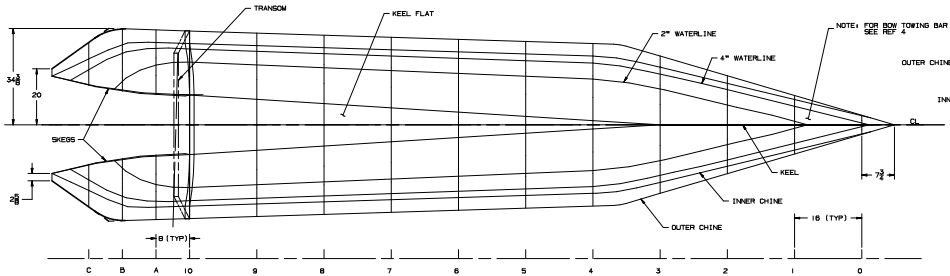

HALFBREADTH PLAN

SCALE: 1 1/2" = 1'-0"

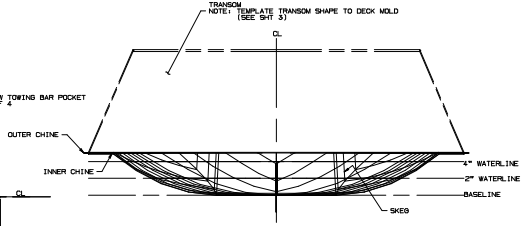

BODY PLAN

SCALE: 3"= 1'-0"

NAVAL SURFACE WARFARE CTR COMBATANT CRAFT DEPARTMENT	SIZE H	CAGE CODE 53711	CONT. NO. 16FX6998	SHEET 101	NSWC-CCD DWG NO. 23301101	REV
PREPARED BY M. STAFFORD						
ISSUED BY	SCALE:				SHEET 2 OF 3	

M. STAFFORD (9/24/01)

DECK / TABLE OF OFFSETS	NOTE: OFFSETS GIVEN IN (FEET-INCHES-SIXTEENTHS)															
STATIONS	0	1	2	3	4	5	6	7	8	9	10	A	B	C	D	E
HALF BREADTHS FORM CENTERLINE																
SHEER	0-0-0	0-0-0	0-2-7	0-8-14	0-8-14	0-10-3	0-10-7	0-10-11	0-10-15	0-11-4	0-11-8	0-11-11	0-11-8	0-9-9	0-0-0	0-0-0
OUTER CHINE	0-2-5	0-7-0	0-11-15	1-4-9	1-7-9	1-7-13	1-8-5	1-8-13	1-9-5	1-9-13	1-10-5	1-10-9	1-10-13	1-7-9	1-11-15	0-6-4
INNER CHINE (BOND LINE)	0-2-3	0-6-11	1-1-10	1-6-15	2-1-4	2-2-0	2-4-11	2-5-8	2-4-3	2-5-0	2-5-11	2-6-1	2-6-7	2-1-8	1-6-1	0-0-0
HEIGHTS ABOVE BASELINE																
SHEER	1-6-9	0-10-3	0-5-2	0-4-10	0-4-2	0-3-6	0-3-1	0-0-9	0-2-1	0-1-8	0-1-2	0-0-12	0-0-8	0-0-4	0-0-0	0-0-0
CHINE	2-11-10															2-11-10

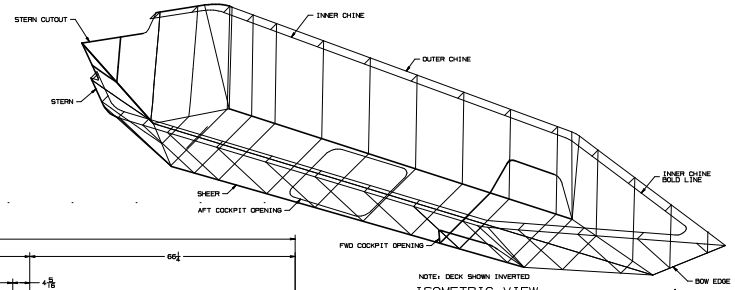

NOTE: DECK SHOWN INVERTED

ISOMETRIC VIEW

SCALE: 1 1/2" = 1'-0"

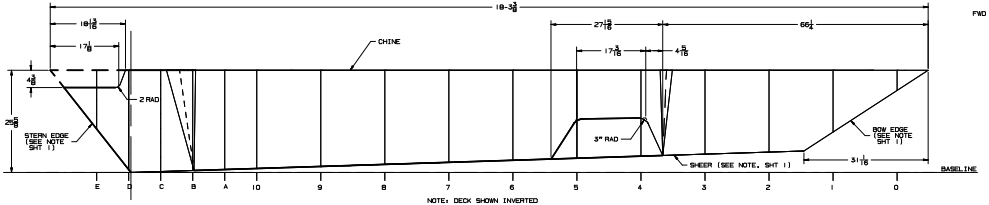

NOTE: DECK SHOWN INVERTED

PROFILE VIEW

SCALE: 1 1/2" = 1'-0"

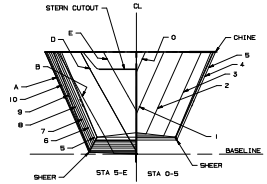

NOTE: DECK SHOWN INVERTED

BODY PLAN

SCALE: 1 1/2" = 1'-0"

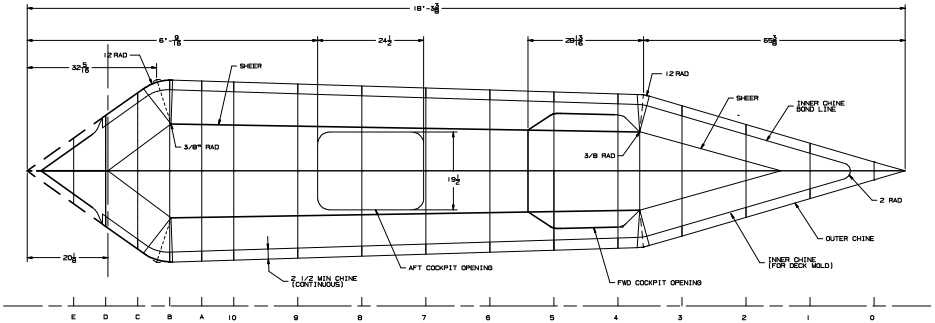

HALFBREADTH PLAN

SCALE: 1 1/2" = 1'-0"

NAVAL SURFACE WARFARE CTR COMBATANT CRAFT DEPARTMENT	SIZE	CAGE CODE	CRAFT	SIZE	MDC-CCD DWG NO.	REV
PREPARED BY M. STAFFORD	H	53711	18EX8NB	101	23309101	
ISSUED BY	SCALE: AS NOTED				SHEET 3 OF 3	

REVISIONS				
ZONE	REV	DESCRIPTION	DATE	APPROVED

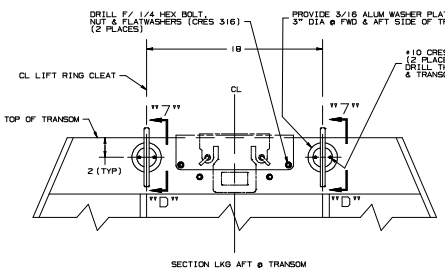

DETAIL 7-F
AFT LIFTING RINGS
SCALE: 3" = 1'-0"

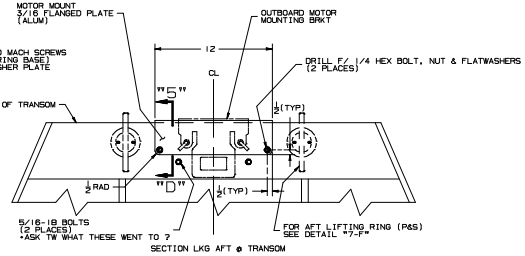

DETAIL 5-F
OUTBOARD MOTOR MOUNT
SCALE: 3" = 1'-0"

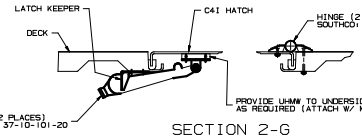

SECTION 2-G
SCALE: 6" = 1'-0"

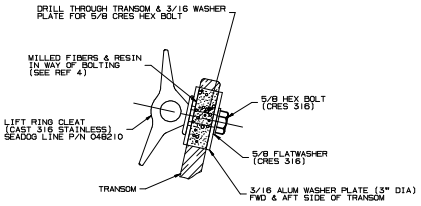

SECTION 7-D
SCALE: 6" = 1'-0"

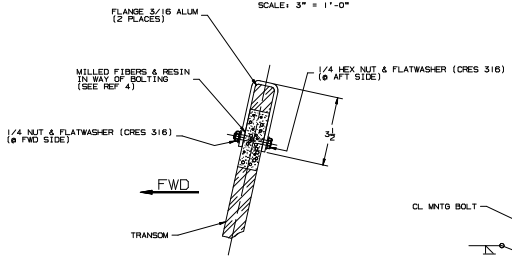

SECTION 5-D
SCALE: 6" = 1'-0"

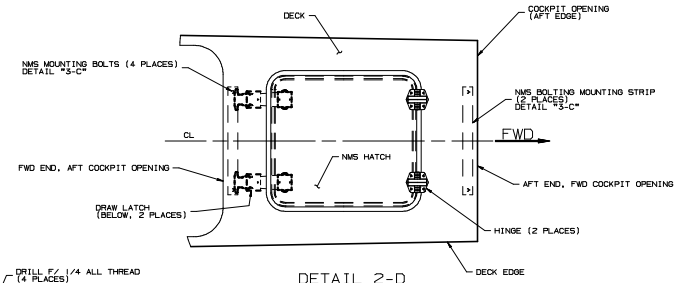

DETAIL 2-D
NMS HATCH INSTALLATION
SCALE: 3" = 1'-0"

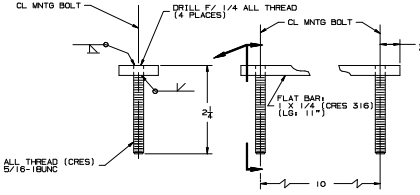

DETAIL 3-C
NMS BOLTING STRIP
(2 REQUIRED)
SCALE: 12" = 1'-0"

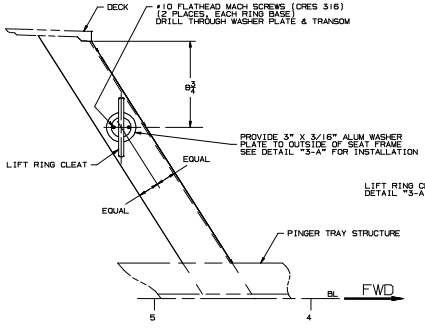

DETAIL 6-A
FWD LIFTING RING INSTALLATION
SCALE: 3" = 1'-0"

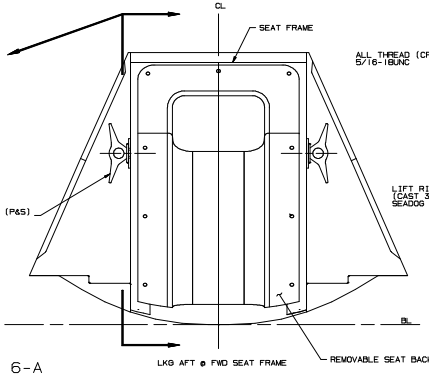

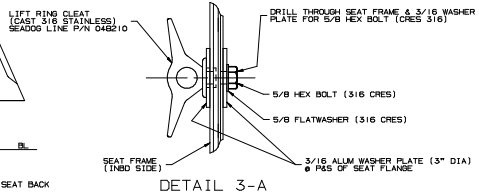

DETAIL 3-A
SCALE: 6" = 1'-0"

GENERAL NOTES

1. REMOVE ALL SHARP EDGES AND CORNERS FROM METAL FABRICATIONS.
2. ALL CRES MATERIAL NOTED ON THIS DRAWING SHALL BE 316.

REF NO.	DOCUMENT TITLE	DOCUMENT NO.
5	THIS DRAWING	18EXBWB/MKII-101-23301105
4	STRUCTURAL PLAN AND DETAILS	18EXBWB/MKII-101-23301104
3	APPGT PLAN AND INB PROFILE	18EXBWB/MKII-101-23301103
2	CURVES OF FORM	NOT USED
1	LINES AND OFFSETS	18EXBWB/MKII-101-23301101

DATA LIST

CONTRACT DRAWING

CARDEROCK DIVISION
NAVAL SURFACE WARFARE CENTER
COMMERCIAL CRAFT ENGINEERING DETACHMENT, NORFOLK
116 LAKE VIEW PARKWAY
SUITE 200
SUFFOLK, VA 23435-2699

DRAWN BY M. STAFFORD	CHECKED BY M. STAFFORD
DATE OF WORK	APPROVED BY
PROJ ENGRG	SYS ENGR
SUPT ENGR	MGR ENGR
APVD FOR MANUF	
FOR COMMENT	DATE

DEPARTMENT OF THE NAVY
NAVAL SEA SYSTEMS COMMAND
WASHINGTON, DC 20362

18 FOOT EXB-WORKBOAT
MISC DETAILS

MISC DETAILS

SIZE	CODE IDENT	CRAFT	SHEET	NAVSEA DWG NO.	REV
H	53711	18EXBWB	101	23301105	

SCALE: AS NOTED SHEET 1 OF 2

SCANNED (01/08/07)

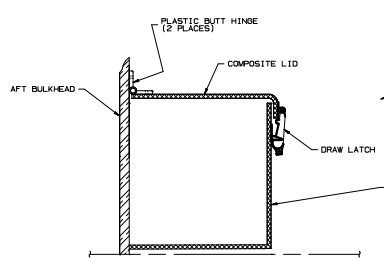

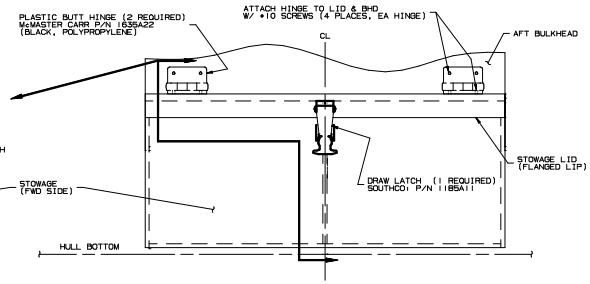

DETAIL 11-F
BATTERY STOWAGE LATCH INSTALLATION
SCALE: 6" = 1'-0"

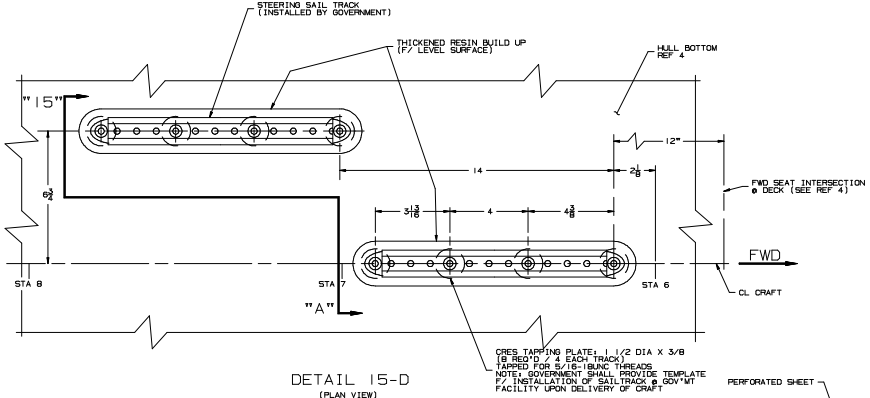

DETAIL 15-D
(PLAN VIEW)
STEERING SYSTEM TRACKS INSTALLATION
SCALE: 6" = 1'-0"

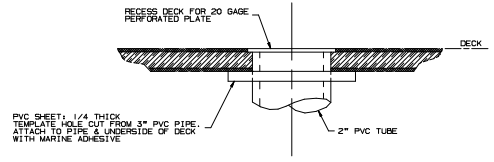

DETAIL 18-D
SCALE: 12" = 1'-0"

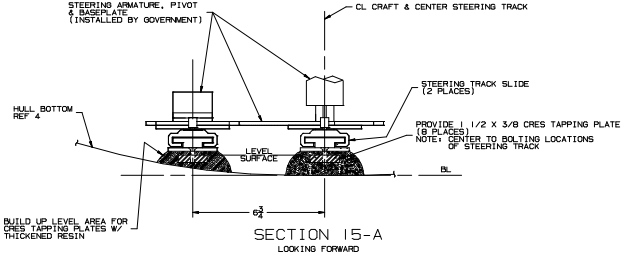

SECTION 15-A
LOOKING FORWARD
SCALE: 6" = 1'-0"

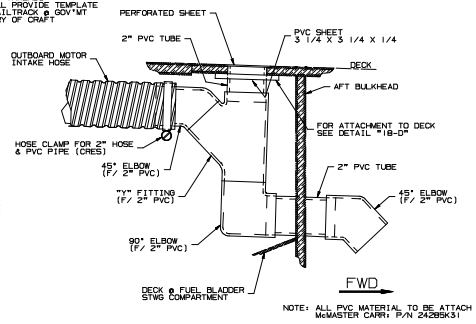

NOTE: ALL PVC MATERIAL TO BE ATTACH USING CPVC CEMENT & PRIMER.
McMASTER CARR: P/N 24285K31

DETAIL 19-A
OUTBOARD MOTOR AIR INTAKE
SCALE: 6" = 1'-0"

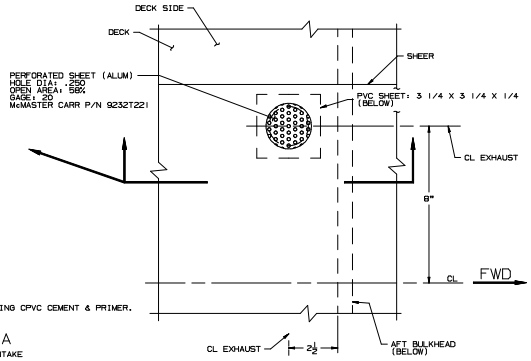

NAVAL SURFACE WARFARE CTR COMBATANT CRAFT DEPARTMENT	SIZE	CAGE CODE	CRAFT	SWBS	NSWC-CCD DWG NO.	REV
PREPARED BY M.STAFFORD	H	53711	1B2DWG	101	23301105	
ISSUED BY	SCALE:				SHEET 2 OF 2	

U:\CAD\PDWG (8.4x11)