DWG NO.	SH
0206133	2

REVISION HISTORY

ZONE	LTR	DESCRIPTION	DATE	APPROVED
	–	INITIAL RELEASE	2-13-03	TLW

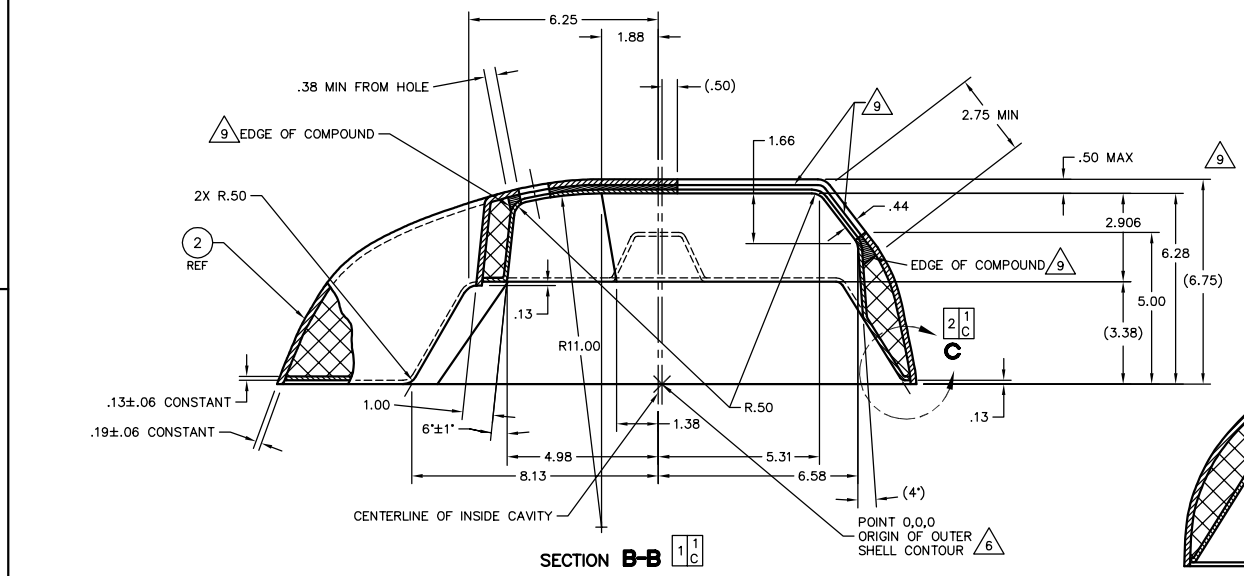

SECTION **B-B** 1 1 C

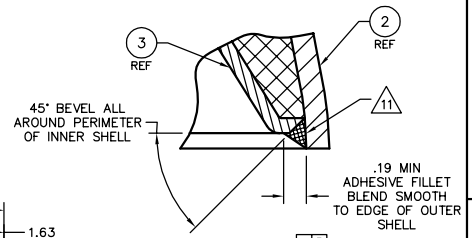

VIEW **C** 2 5 C
TYPICAL SEAM AROUND PERIMETER
SCALE 2/1

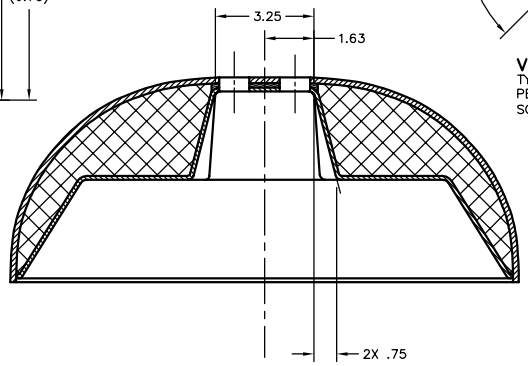

SECTION **E-E** 1 4 A

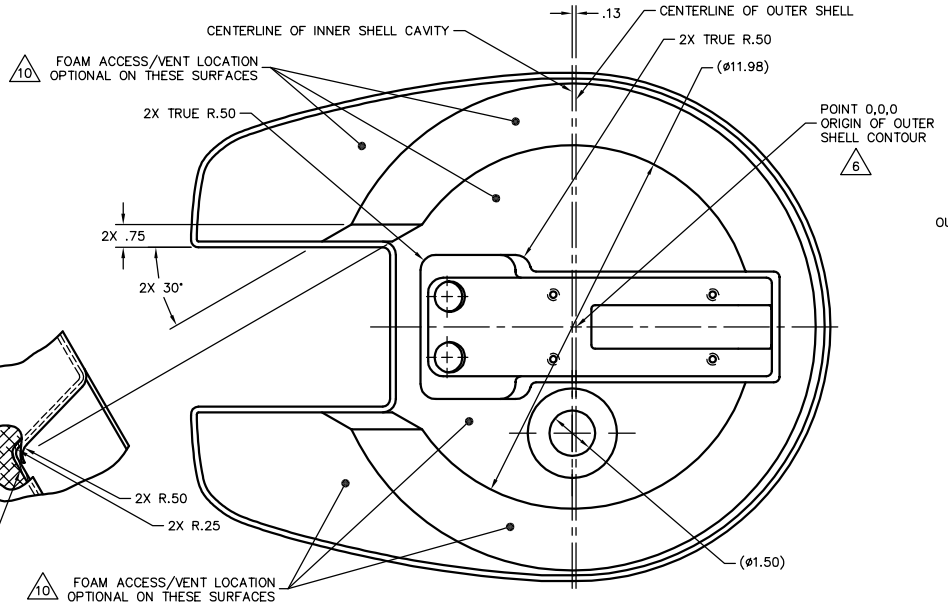

VIEW **A-A** 1 2 A

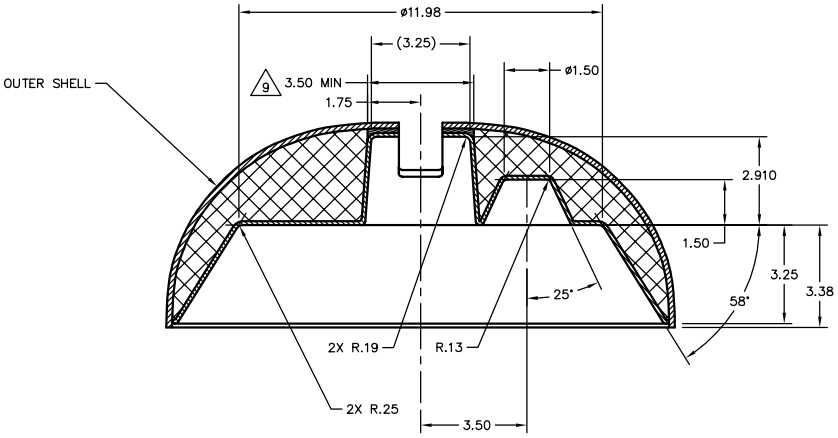

SECTION **D-D** 1 3 A

SIZE	CAGE CODE	DRAWING NUMBER	REV
D	55910	0206133	–
SCALE 1/2		SHEET 2	

REV. 9/92

0206133_02_–.DWG