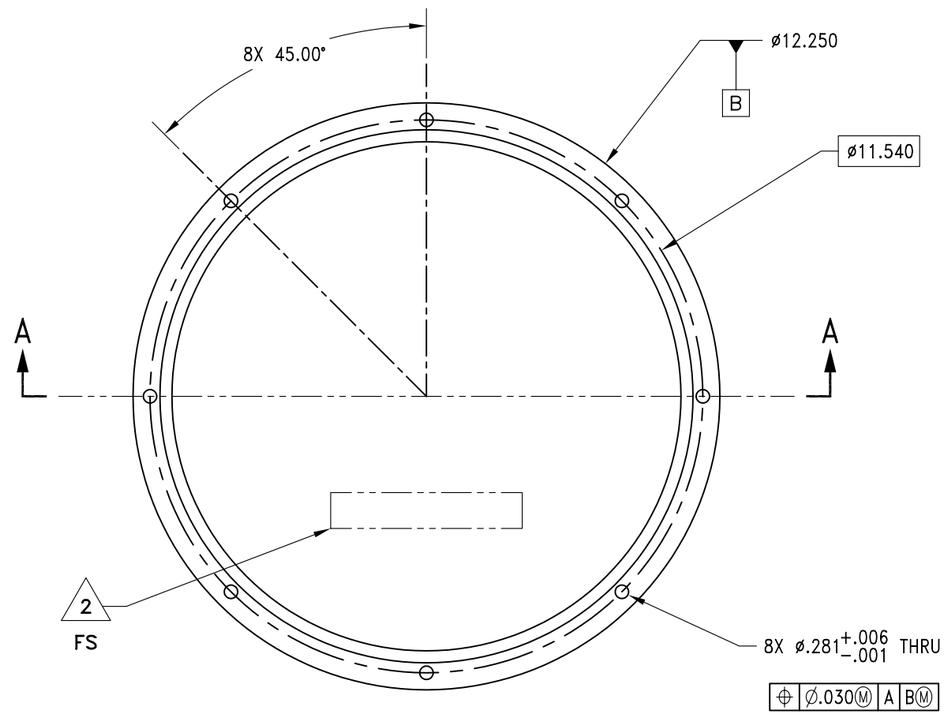

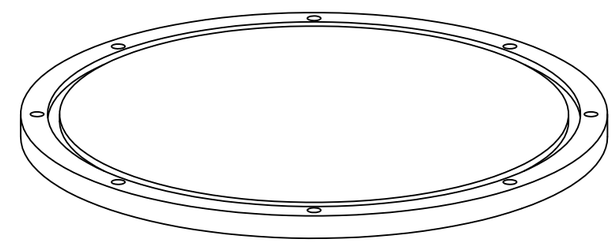

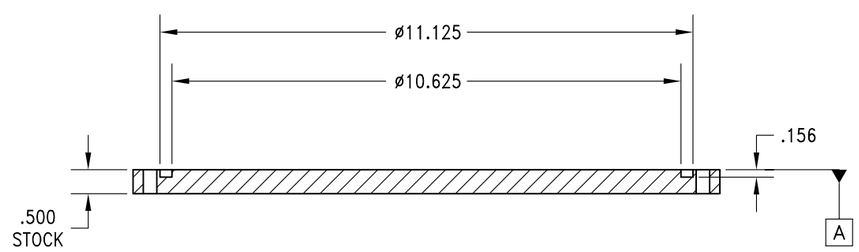

SECTION A-A

(1) 53711-7449540

PLATE COVER, TOP TARGET MARK 44	SIZE C	CAGE NO. 53711	DWG. NO. 7449540	REV. —
DRAWN B. DELMAR (S)				
ISSUED 02/08/16	SCALE 1/2	UNIT WT.		SHEET 2 OF 2