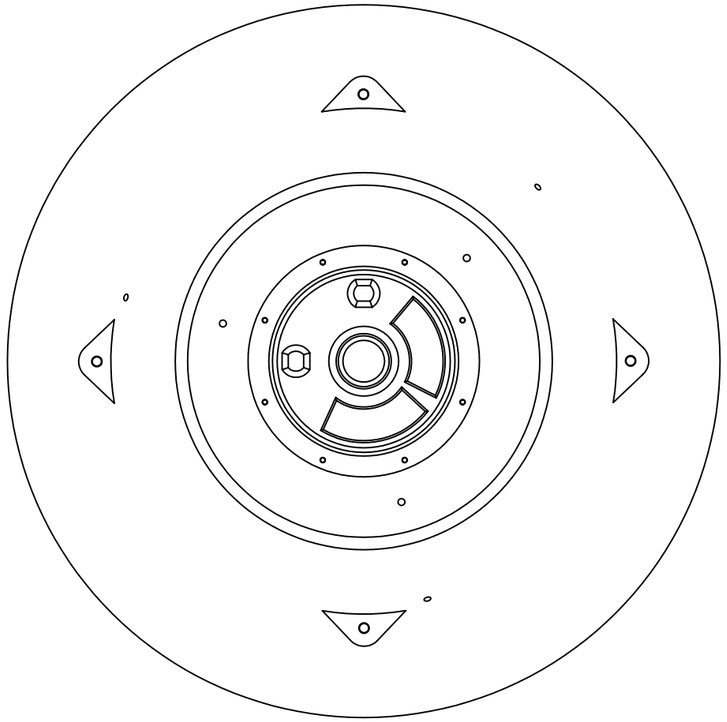

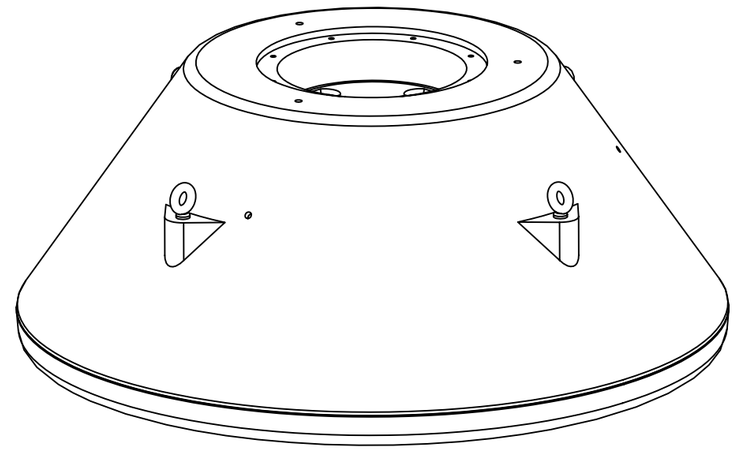

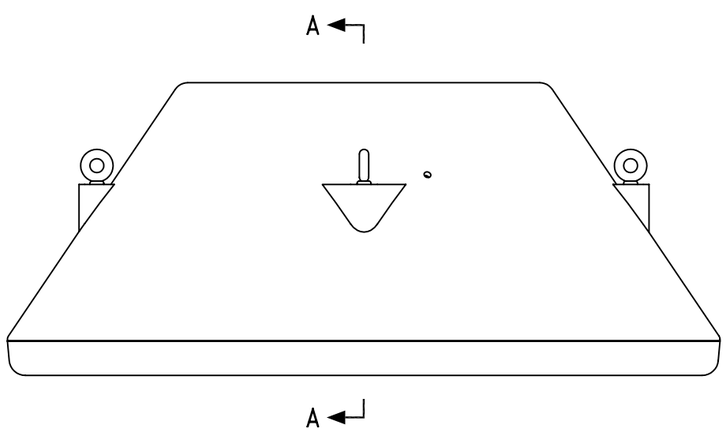

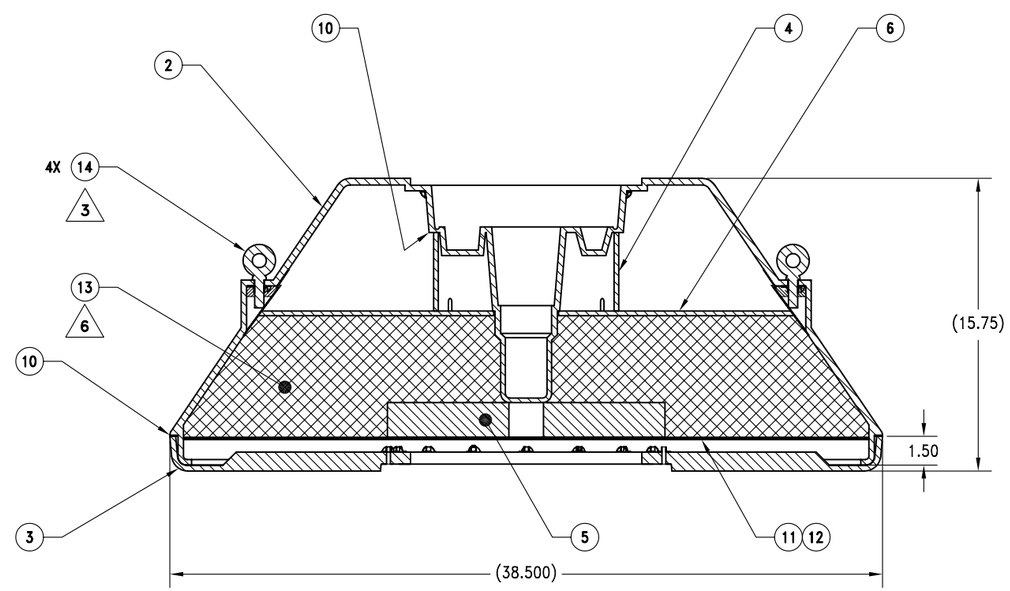

SECTION A-A

1 53711-7449539-1

CONE, TRUNCATED TARGET MARK 44	SIZE	CAGE NO.	DWG. NO.	REV.
DRAWN B. DELMAR (S)	D	53711	7449539	A
ISSUED 02/08/16	SCALE 1/4	UNIT WT.		SHEET 2 OF 5