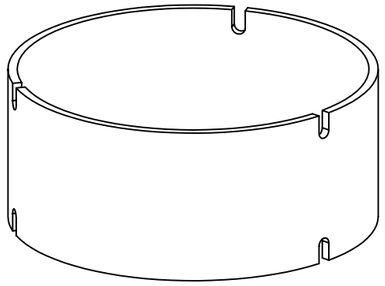

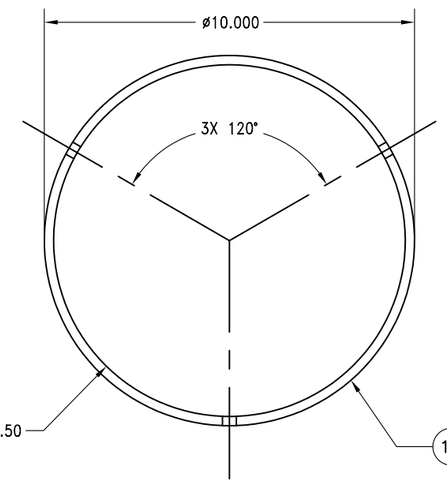

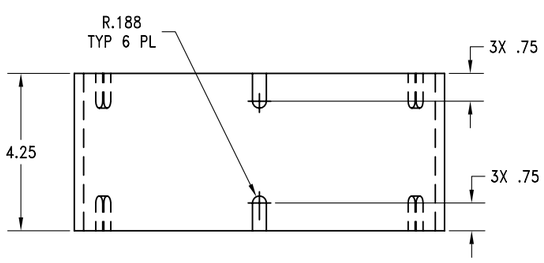

(4) 53711-7449539-4

SCALE: 1/2

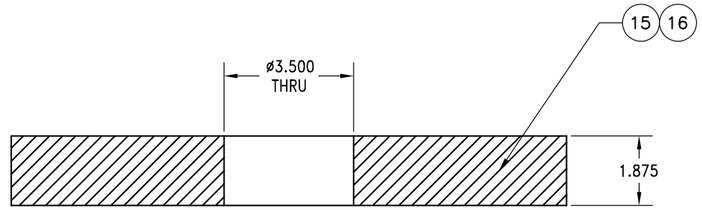

SECTION E-E

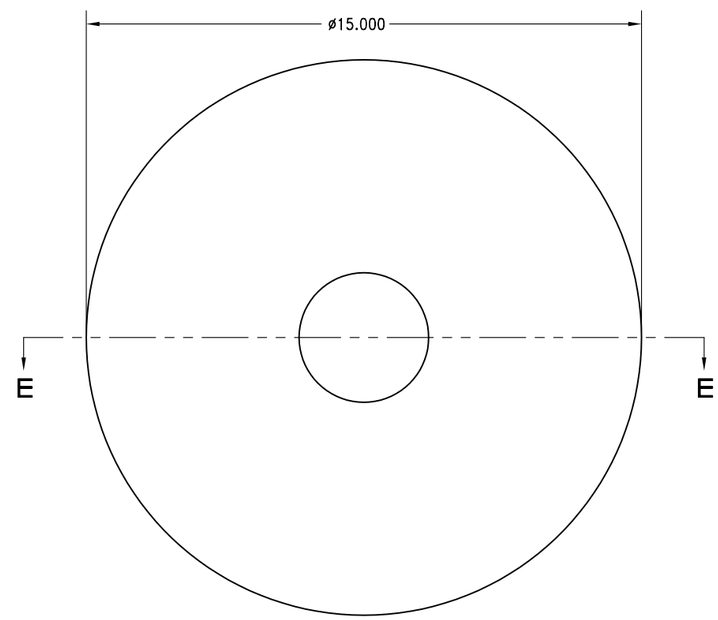

(5) 53711-7449539-5

SCALE: 1/2

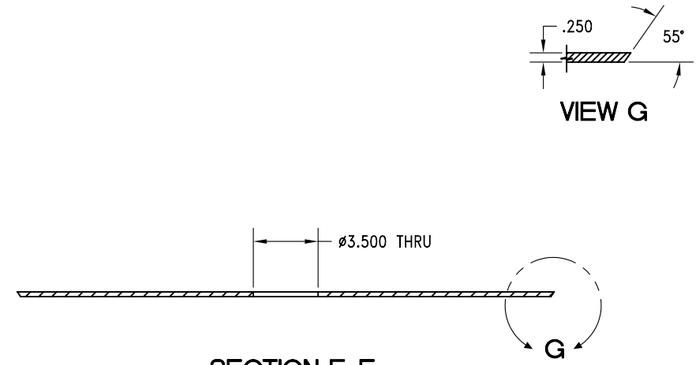

SECTION F-F

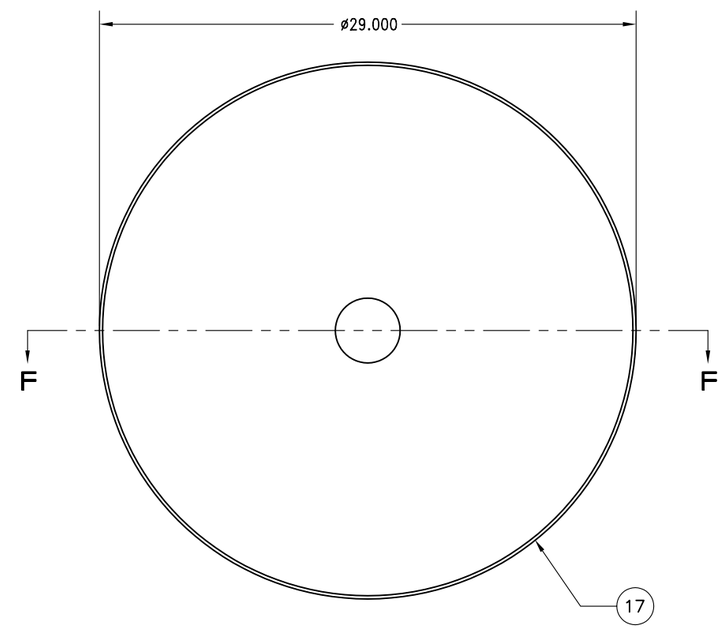

(6) 53711-7449539-6

SCALE: 1/4

CONE, TRUNCATED TARGET MARK 44	SIZE D	CAGE NO. 53711	DWG. NO. 7449539	REV. —
DRAWN B. DELMAR (S)	SCALE NONE	UNIT WT.		SHEET 5 OF 5
ISSUED 02/08/16				