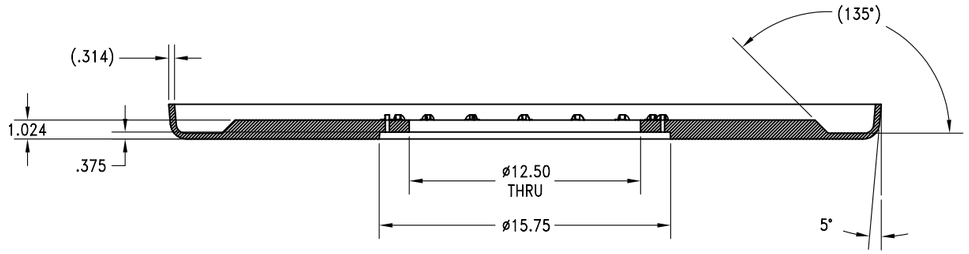

SECTION C-C

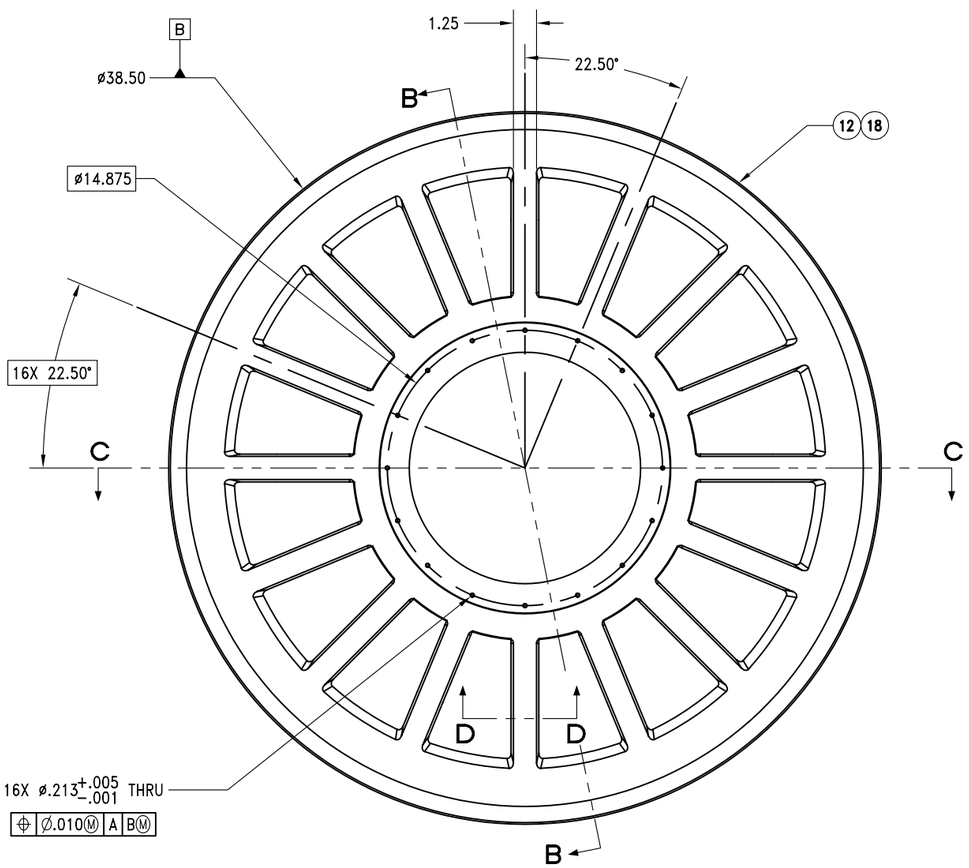

3 53711-7449539-3

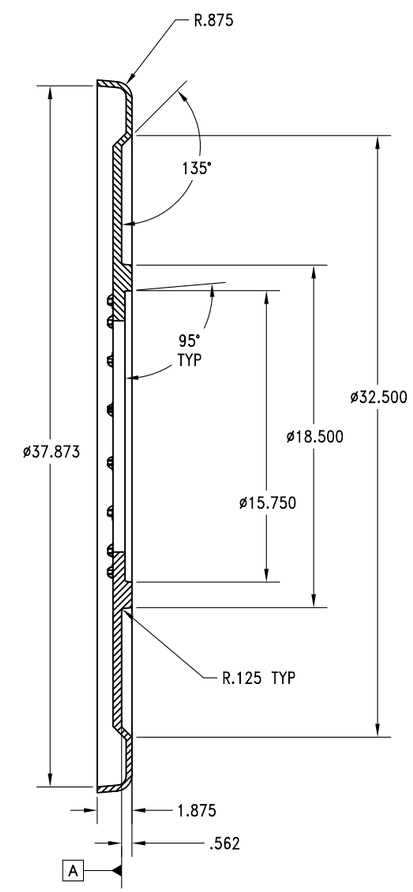

SECTION B-B
VIEW ROTATE CLOCKWISE, 11.25°

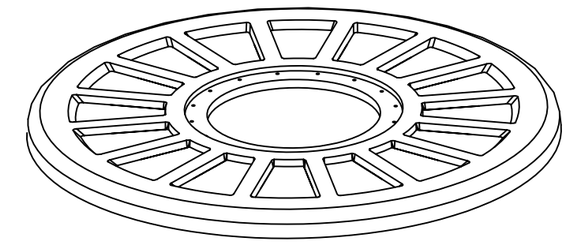

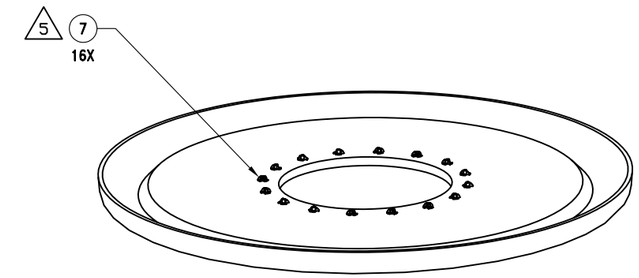

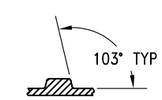

SECTION D-D

CONE, TRUNCATED TARGET MARK 44	SIZE D	CAGE NO. 53711	DWG. NO. 7449539	REV. —
DRAWN B DELMAR (S)				
ISSUED 02/08/16	SCALE 1/4	UNIT WT.		SHEET 4 OF 5