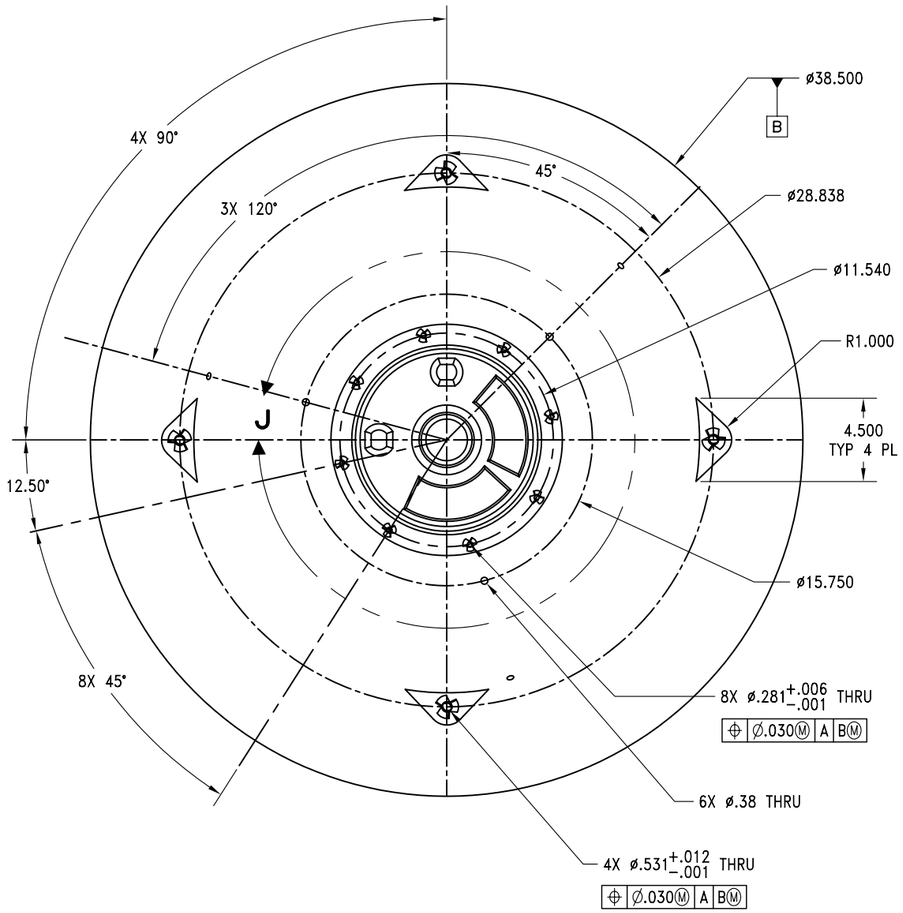

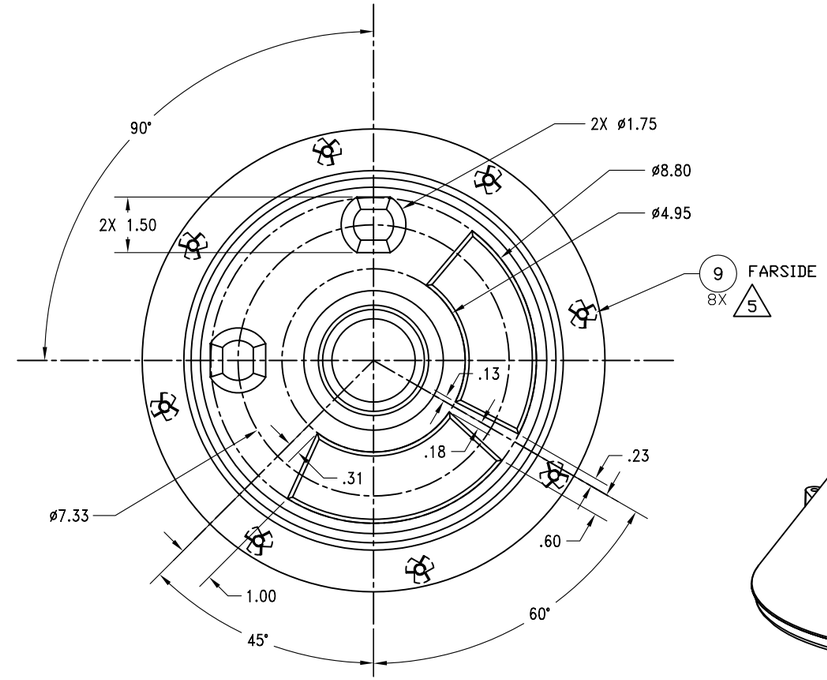

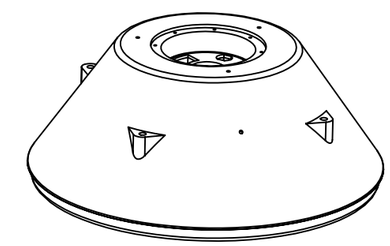

DETAIL J
SCALE: 2/1

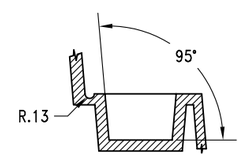

DETAIL K
SCALE: 2/1

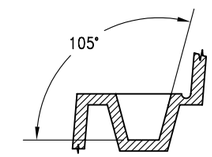

DETAIL L
SCALE: 2/1

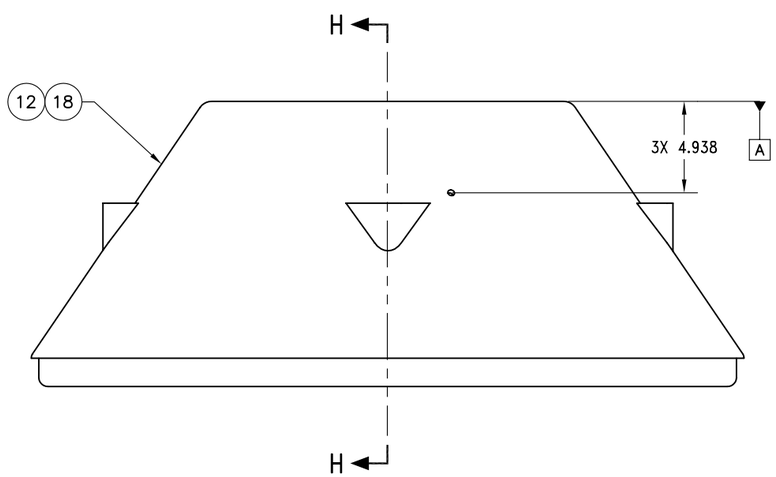

2 53711-7449539-2

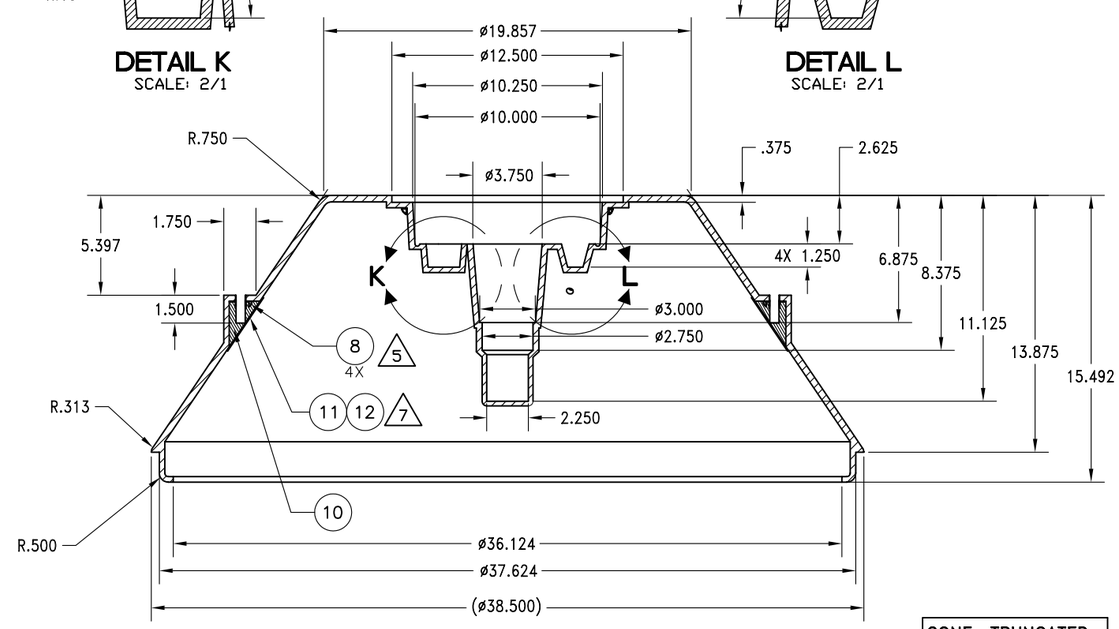

SECTION H-H

CONE, TRUNCATED TARGET MARK 44	SIZE D	CAGE NO. 53711	DWG. NO. 7449539	REV. —
DRAWN B. DELMAR (S)				
ISSUED 02/08/16	SCALE 1/4	UNIT WT.		SHEET 3 OF 5