DWG NO 70-P45106G SH 1

REVISION HISTORY			
REV	DESCRIPTION	DATE	APPROVED
-	INITIAL RELEASE	05-6-21	B.VALLIERE
A	SEE MCO H42696	05-09-28	B. VALLIERE
B	SEE MCO H45285	05-10-28	B. VALLIERE
C	SEE MCO H45316 (R1)	05-11-09	W. BAXTER
D	SEE MCO H45471	06-02-22	B. VALLIERE

CAD MAINTAINED. CHANGES SHALL BE INCORPORATED BY THE DESIGN ACTIVITY ONLY.

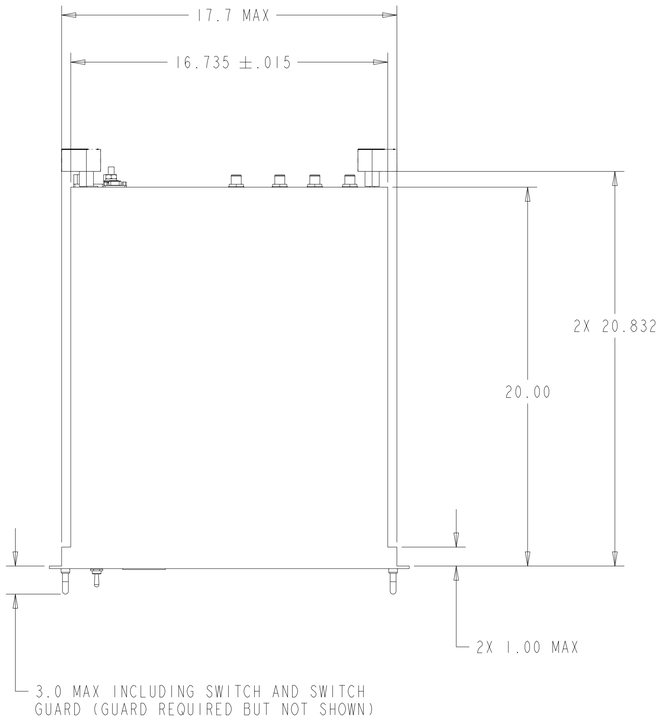

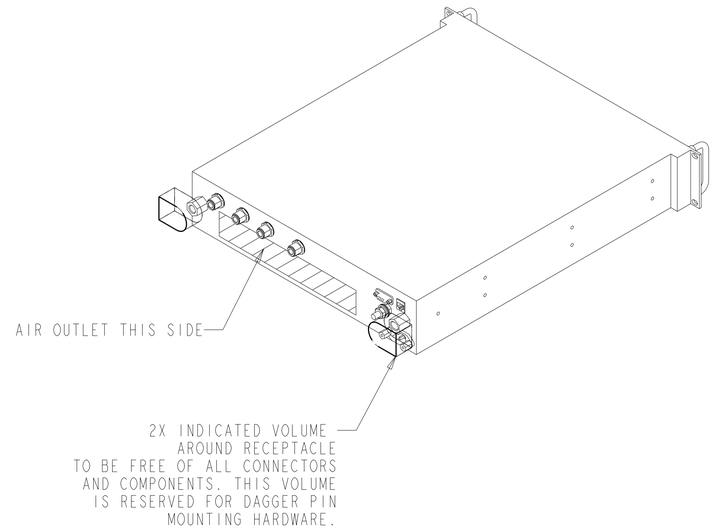

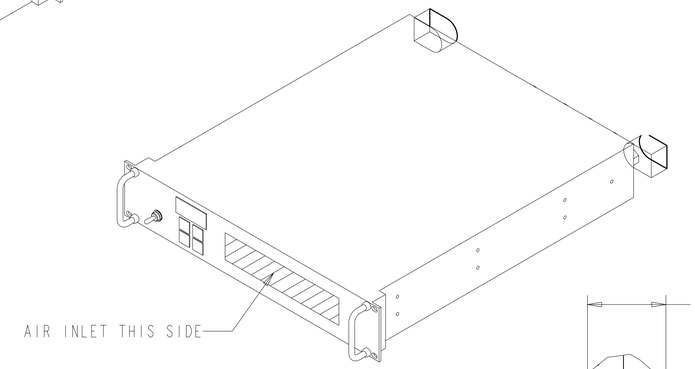

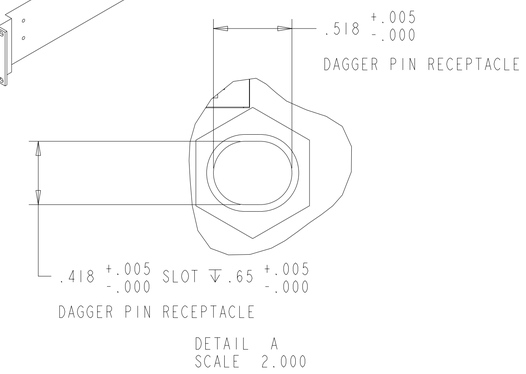

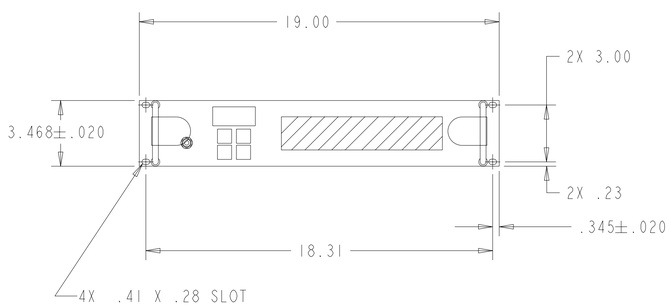

(FRONT PANEL AND MOUNTING HOLES PER EIA-310)

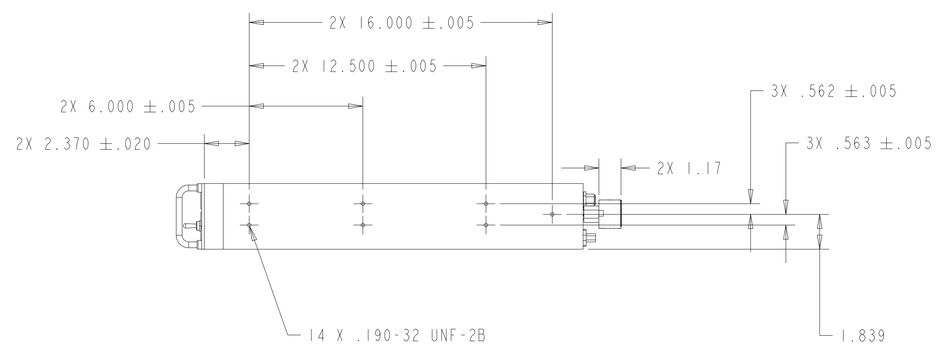

(SLIDE ATTACHMENT TAPPED HOLE PATTERN)

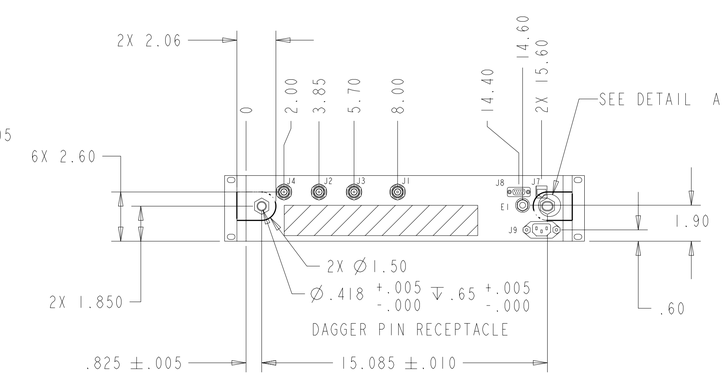

COPYRIGHT © 2006 GENERAL DYNAMICS. ALL RIGHTS RESERVED.

SYM	SIZE	QTY
	HOLE LIST	

"EXPORT CONTROL WARNING - Do not disclose this document or its contents to non-U.S. Citizens, or transmit this document or its contents outside the United States without the written permission of General Dynamics and required U.S. Government approvals."

NEXT ASSY	USED ON
APPLICATION	

UNLESS OTHERWISE SPECIFIED: DIMENSIONS ARE IN INCHES TOLERANCES ON:
2 PLACE ±0.03 3 PLACE ±0.010
ANGLE ±0.5°
THIRD ANGLE PROJECTION

CONTR 16609		
ISS	H42201-261 (-)	05-6-28
APPROVALS		
DWN	Bob Griffith	03/08/05
CHKR	J.MASON	05-6-17
QA	D.BAILEY	05-6-27
MATL	D.MCDONALD	05-6-21
MFG	J.MORRIS	05-6-21
ENG	D.HARRISON	05-6-27
CUST		

GENERAL DYNAMICS
SCOTTSDALE, ARIZONA 85252-1417

TITLE
INTERFACE CONTROL DRAWING, DMR EXTERNAL 100W-A VHF/UHF HIGH POWER RF AMPLIFIER

SIZE D | CAGE CODE 1VPW8 | DWG NO 70-P45106G

SCALE 0.250 | WT | SHEET 1 OF 1

ASME Y14.1-1995 DRAWING FORMAT - 3/97

MODEL: 70-P45106G

Pro/E: 70-P45106G