Digital Modular Radio (DMR) AN/USC-61 (C)

Appendix C of the DMR External RF Control Interface, Ethernet Messages

CDRL No.	N/A
Contract	N00039-98-D-0029
Contract Mod	N/A
Delivery Order	N/A

EXPORT CONTROL WARNING

Do not disclose or provide this document or item (including its contents) to non-U.S. Citizens or non U.S. Permanent Residents, or transmit this document or item (including its contents) outside the United States without the written permission of General Dynamics and required U.S. Government export approvals

Copyright © 2007 General Dynamics, Inc. All rights reserved.

Prepared By GENERAL DYNAMICS C4 SYSTEMS Inc.
8220 E. Roosevelt Street
Scottsdale, AZ 85257

Document No. **70-P41401M**

Revision **B**

Date **19 March 2007**

Document Revision History

REV	DATE	DESCRIPTION	APPROVER
-	02/02/05	Formal Release - SMCO H42491	D. Westhafer
A	12/22/05	SMCO – H45380	D. Westhafer
B	3/19/07	SMCO – H45792	J. Trotter

Technical Data History

VERSION	DATE	DESCRIPTION OF CHANGE	NAME
XA	06/28/00	Updated MUTE control field to “DENY”, “PERMIT” definition. Added “No Change” value to “Discrete Control – Global message” Changed Status response messages. Fixed the message length to match the defined message. Added description for Frequency/Channel/Band data field. Added Waveform Power Ratio field to frequency and power parameters structure and power set messages Added hyperlinks to Message ID table, and all message fields. Added Reset Complete response message. Added Device Command Complete response message. Updated Device Channel Assignment message description. Defined Download Type data field. Edited redlines from last release.	M. Humphrey
XB	08/06/01	Added Task Complete and Interference Canceller messages.	B. Clark
XC	9/19/02	Added messages 62, 63, 64. Added SysCal, alarm, status fields to PA Status Response message (ID 37). Removed obsolete fields and messages from dictionary.	B. Clark
XD	1/6/03	Added clear peripheral faults (2D) message, Added device query (2E) message, Added fields 28 through 35 to PA status response message, Edited WPR field to focus on ratio rather than waveform details Removed all “WITS” labels, replacing with DMR labels Removed all “Control” from External RF Control labels Added ready/busy, transmit state, and frequency parameter fields to SDC status response message (3A).	B. Clark
(-)	01/24/05	Implemented redlines accumulated since last ‘D’ release. DMR build (release) notes are added to each requirement related item changed by this revision. Other editorial changes include: - updated contents of Fault error code field description - added sign and type information to all (message) RF power fields - corrected description of Local Lockout data field - added elements to Device Type data field to support new devices - added elements to WPR data field to support new modes - “reserved” Waveform Modes field, is dup of Waveform Type	B. Clark

Technical Data History

VERSION	DATE	DESCRIPTION OF CHANGE	NAME
A	12/16/05	- corrected RF Data field length descriptions and references - updated msg 31 (long query response) to align with LRU ICDs - updated msg 33 (ASCII query response to align with LRU ICDs - added “two’s compliment” label to all signed data field - update Control mode data field to align with LRU ICDs - added detailed description to Packet Count data field - updated Reset Status data field to align with LRI ICDs - edited for misc accumulated redlines	B. Clark
B		- added ver 3.0 specific notes to PA status msg (37) - updated SDC status msg (3A) to include all coupler properties - corrected para 5.3.11 to align with as-built	B. Clark

Table of Contents

1 General Information 9
1.1 Scope 9
1.2 Overview 9
1.3 Document Summary 10
1.4 Document Description 10

2 Referenced Documents 10

3 General Ethernet Information 11
3.1 External RF Ethernet Message Format 11
3.1.1 Hardware-Supplied Message Overhead 11
3.1.2 External RF Addresses 11
3.1.3 Destination Address Field 12
3.1.4 Source Address Field 12
3.1.5 Message Length Field 12
3.1.6 RF Data Field 12
3.1.6.1 Message Priority Sub-Field (Byte 0) 13
3.1.6.2 Message ID Sub-Field (Byte 1) 13
3.1.6.3 Message Data Sub-Field (Byte 2-1499) 17

4 Detailed Message Descriptions 18
4.1 Global Discrete Control (01H) Message 18
4.1.1 Discrete Control Structure 18
4.2 Channel Discrete Control (02H) Message 18
4.3 Device Discrete Control (03H) Message 19
4.4 Global Frequency Set (04H) Message 19
4.4.1 Frequency Parameters Structure 19
4.5 Channel Frequency Set (05H) Message 19
4.6 Device Frequency Set (06H) Message 20
4.7 Global Frequency and Power Set (07H) Message 20
4.7.1 Frequency and Power Parameters Structure 20
4.8 Channel Frequency and Power Set (08H) Message 20
4.9 Device Frequency and Power Set (09H) Message 21
4.10 Global Power Set (0AH) Message 21
4.10.1 RF Power Parameters Structure 21
4.11 Channel Power Set (0BH) Message 21
4.12 Device Power Set (0CH) Message 22
4.13 Channel ALC ON/OFF (0DH) Message 22
4.14 Device ALC ON/OFF (0EH) Message 22
4.15 Channel External ALC ON/OFF (0FH) Message 22
4.16 Device External ALC ON/OFF (10H) Message 23
4.17 Channel Receive Bypass ON/OFF (11H) Message 23
4.18 Device Receive Bypass ON/OFF (12H) Message 23
4.19 Global Standby Set (13H) Message 23
4.20 Channel Standby Set (14H) Message 24
4.21 Device Standby Set (15H) Message 24
4.22 Global Sleep Set (16H) Message 24
4.23 Channel Sleep Set (17H) Message 24
4.24 Device Sleep Set (18H) Message 25
4.25 Global Mute Set (19H) Message 25
4.26 Channel Mute Set (1AH) Message 25
4.27 Device Mute Set (1BH) Message 25
4.28 Global Reset (1CH) Message 26
4.29 Channel Reset (1DH) Message 26
4.30 Device Reset (1EH) Message 26
4.31 Reset Complete (1FH) Message 26
4.32 Global Path Set (20H) Message 27

Table of Contents

4.33 Channel Path Set (21H) Message 27
4.34 RFD Mode Set (22H) Message 27
4.35 Simple Switch Set (23H) Message 27
4.36 Multi-pole Switch Set (24H) Message 28
4.37 Legacy Select Set (25H) Message 28
4.38 Special Test Request (2C) Message 28
4.39 Fault Clear (2D) Message 28
4.40 Device Query Request (2E) Message 29
4.41 Command Complete Response (2FH) Message 29
4.42 Global Query Request (30H) Message 29
4.43 Query Response – Long (31H) Message 30
4.43.1 Power Amplifier Long Response Message Structure 30
4.43.2 Legacy Controller Long Response Message Structure 31
4.44 Query Response – Short (32H) Message 31
4.45 Query Response – ASCII (33H) Message 32
4.45.1 VHF/UHF Power Amplifier ASCII Response Message Structure 32
4.45.2 HF Power Amplifier ASCII Response Message Structure 33
4.45.3 Legacy Controller ASCII Response Message Structure 33
4.46 Channel Assignment (34H) Message 33
4.47 Global Status Request (35H) Message 35
4.48 Device Status Request (36H) Message 35
4.49 Status Response – Power Amplifier (37H) Message 35
4.50 Status Response – RFD Controller (38H) Message 37
4.51 Status Response – Tuners (39H) Message 37
4.52 Status Response – Legacy Controller (3AH) Message 38
4.53 Status Response – Interference Canceller (3BH) Message 39
4.53.1 Interference Canceller Channel Status Structure 39
4.54 ASCII Command (3CH) Message 39
4.55 ASCII Response (3DH) Message 39
4.56 Fault Response (3EH) Message 40
4.57 Talk Mode Set (3FH) Message 40
4.58 Command Error (40H) Message 40
4.59 Echo Request (41H) Message 40
4.60 Echo Response (42H) Message 41
4.61 Local Lockout (43H) Message 41
4.62 Discrete Hardwire Option (44H) Message 41
4.63 Waveform Mode (45H) Message 42
4.64 Discrete Delays (46H) Message 42
4.65 Legacy Controller I/O Configuration (47H) Message 42
4.65.1 I/O ‘X’ Configuration Structure 43
4.66 Legacy Controller Output Command (48H) Message 43
4.66.1 I/O Output ‘X’ State Structure 43
4.67 Legacy Controller I/O Read Request (49H) Message 43
4.68 Legacy Controller I/O Read Response (4AH) Message 44
4.69 Waveform Parameters Set (4BH) Message 44
4.70 Global Time Sync (50H) Message 44
4.71 Device Time Sync (51H) Message 45
4.72 Global Power Increment (60H) Message 45
4.73 Device Power Increment (61H) Message 45
4.74 RF Level Set Message (ID 62H) 46
4.75 Power Resolution Set Message (ID 63H) 46
4.76 Global Combo Frequency Set (A0H) Message 46
4.77 Channel Combo Frequency Set (A1H) Message 46
4.78 Software Download Status (FEH) Message 47
4.79 Software Download (FFH) Message 47

Table of Contents

5 Message Element Descriptions 48
5.1 ASCII Field Descriptions 48
5.1.1 COTS Command String ASCII Field 48
5.1.2 COTS Response String ASCII Field 48
5.1.3 Component Title ASCII Field 48
5.1.4 Fault Description ASCII Field 48
5.1.5 Fiber Optic Capability ASCII Field 48
5.1.6 Legacy Control String ASCII Field 48
5.1.7 Part Number ASCII Field 48
5.1.8 Serial Number ASCII Field 48
5.1.9 Test Status ASCII Field 48
5.1.10 Text Label ASCII Field 49
5.1.11 Version ID ASCII Field 49
5.2 Logic Field Descriptions 49
5.2.1 Automatic Level Control (ALC) Logic Field 49
5.2.2 Reserved 49
5.2.3 BIT LRU Number Logic Field 49
5.2.4 BIT Request Logic Field 49
5.2.5 BIT Status Logic Field 49
5.2.6 Blocking Mode Logic Field 49
5.2.7 Device Ready Logic Field 50
5.2.8 Duplex Mode Logic Field 50
5.2.9 Extended Message Logic Field 50
5.2.10 Frequency Strobe Logic Field 50
5.2.11 Local Lockout Logic Field 50
5.2.12 Mute Enable Logic Field 50
5.2.13 Mute State Logic Field 50
5.2.14 Reserved 50
5.2.15 PA Alert – Fault Logic Field 51
5.2.16 PA Alert – Warning Logic Field 51
5.2.17 Receiver Bypass Logic Field 51
5.2.18 Reset Logic Field 51
5.2.19 Sleep Mode Logic Field 51
5.2.20 Standby Mode Logic Field 52
5.2.21 Test – Loop Back Logic Field 52
5.2.22 Transmit Key Logic Field 52
5.2.23 Tune Error Logic Field 52
5.2.24 Device Control Mode Logic Field 52
5.2.25 Device Connect Status Logic Field 52
5.3 Data Field Descriptions 53
5.3.1 ALC Slew Rate 53
5.3.2 Available I/O Data Field 53
5.3.3 Channel Number Data Field 53
5.3.4 Command Error Code Data Field 53
5.3.5 Command Speed Type Data Field 54
5.3.6 Control Mode Data Field 54
5.3.7 Delay Count – Long Data Field 54
5.3.8 Delay Count – Short Data Field 54
5.3.9 Device Address Data Field 54
5.3.10 Device Type – Legacy Data Field 55
5.3.11 Device Type – Network Data Field 55
5.3.12 Download Type Data Field 56
5.3.13 Fault Class Data Field 56
5.3.14 Error Code Data Field 56
5.3.15 Frequency Base Data Field 57
5.3.16 Frequency/Channel/Band Set Data Field 57

Table of Contents

5.3.17 Effectivity Command Data Field 57
5.3.18 Frequency Limit (LOW, HIGH) Data Field 57
5.3.19 Frequency Resolution Data Field 58
5.3.20 Gain Set Data Field 58
5.3.21 I/O Data Field 58
5.3.22 I/O Number Data Field 58
5.3.23 I/O Type Data Field 59
5.3.24 Input Select Data Field 59
5.3.25 Input Threshold Data Field 59
5.3.26 Legacy Mode Select Data Field 60
5.3.27 Multi-pole Switch Position Data Field 60
5.3.28 Number of Channels Data Field 60
5.3.29 Output Current Data Field 60
5.3.30 Output Voltage Data Field 61
5.3.31 Packet Count Data Field 61
5.3.32 Packet Status Data Field 61
5.3.33 Power Resolution Data Field 62
5.3.34 Reset Status Data Field 62
5.3.35 Response Message Type Data Field 62
5.3.36 RF Power – Signed, Fixed 0.5 dB Data Field 62
5.3.37 RF Power – Signed, Fixed 1.0 dB Data Field 63
5.3.38 RF Power – Signed, Programmable Data Field 63
5.3.39 RF Power – Unsigned, Programmable Data Field 63
5.3.40 RF Step –Signed Value Data Field 63
5.3.41 RFD Path (Channel) Data Field 63
5.3.42 Simple Switch Position Data Field 63
5.3.43 Switch Number Data Field 64
5.3.44 SysCal Offset Data Field 64
5.3.45 SysCal Status Data Field 64
5.3.46 Talk Mode Data Field 64
5.3.47 Tasking Message ID Data Field 65
5.3.48 Temperature Data Field 65
5.3.49 Time – Decimal Data Field 65
5.3.50 Time – Hour Data Field 65
5.3.51 Time – Minute Data Field 65
5.3.52 Vender Download Data Field 65
5.3.53 Vender Download Status Data Field 65
5.3.54 Waveform Parameters Data Field 65
5.3.55 Waveform Modes Data Field 65
5.3.56 Waveform Type Data Field 66
5.3.57 Filter Fault Code 67

6 Appendix A: Abbreviations and Acronyms 67

Table of Contents

List of Figures

Figure 1 External RF Ethernet Block Diagram....9
Figure 2 DMR (Layer 2) MAC Layer Ethernet Packet....11
Figure 3 RF Data Field Structure....12
Figure 4 Priority Byte, Bit Descriptions....13
Figure 5 Radio Channel / Peripheral Port Mapping....34

List of Tables

Table 1 Network Address Types....11
Table 2 Priority Byte....13
Table 3 External RF Command Summary....13

1 General Information

1.1 Scope

This document is an appendix to the DMR External RF (private Ethernet) Interface Control Document (ICD). It describes the DMR External RF Ethernet message structures. Each message is described with an illustration of message content, and text description of selected message fields.

1.2 Overview

The private External RF Ethernet control interface (Figure 1) provides a communication network between the DMR radio and external RF peripherals such as RF power amplifiers and legacy controllers, also known as Signal Data Converter (SDC). The network is IEEE 802.3 full duplex 100Base-TX electrically compliant for Layer 2 MAC (Medium Access Control) communication. The MAC level is commonly referred to as physical layer 2 communications. The network is defined as "private" because only components having specifically deigned Ethernet ports are allowed connection to or use of the network. The External RF control network has a single master, the External RF Ethernet port located inside the DMR radio. All other network components are designed to operate as slaves. With exceptions noted in this document, network components generate messages only in response to command messages generated by the network master. Network components are connected through a Commercial-off-the-Shelf (COTS) Ethernet hub or switch.

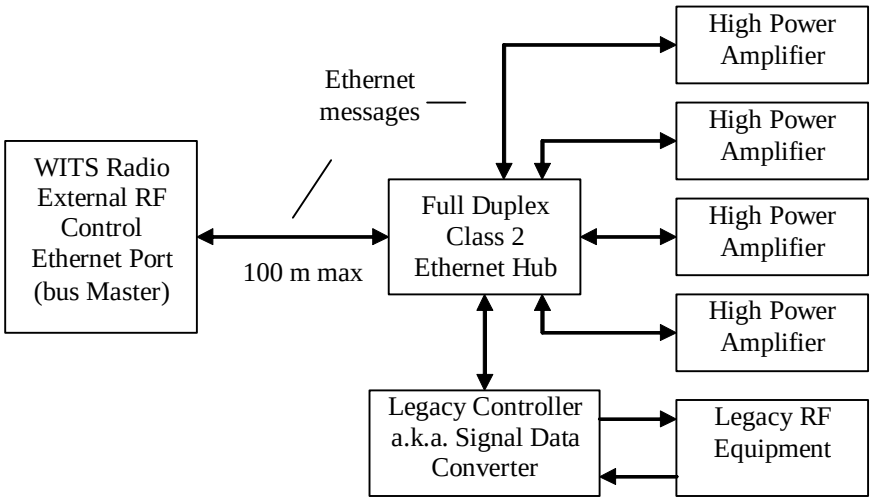

Figure 1 External RF Ethernet Block Diagram

The bus Master (host) controls all External RF LAN (local area network) message traffic. It generates all command and configuration messages, and controls all peripheral device use of the LAN. Peripheral devices generate LAN messages when requested, or allowed by the bus Master.

All External RF LAN devices are assigned a unique, permanent, Medium Access Control (MAC) address. LAN peripherals may also be assigned to radio channel addresses. LAN peripherals process all Global Multicast (all LAN subscribers), Channel Multicast (LAN subscribers mapped to radio channels), and Device (LAN subscriber with matching MAC address) Ethernet messages (paragraph 3.1).

1.3 Document Summary

This document contains four sections; General Information, Referenced Documents, General Ethernet Information, and Detailed Message Descriptions. Interface introduction and overview material is presented in the General Information section. The Referenced Documents section contains a list of materials referenced in this document. DMR applicable protocol is described in the General Ethernet Information section. Low-level descriptions of DMR Ethernet messages are contained in the Detailed Message Descriptions section. A list of acronyms used in this document is included in Appendix A.

1.4 Document Description

This appendix consists of five sections:

Section ID	Description
General Information	Document introduction and overview.
Referenced Documents	List documents referenced by contents of this document.
General Ethernet Information	Overview of DMR Ethernet message formats.
Detailed Message Descriptions	Describes contents of all DMR private Ethernet bus messages.
Message Field Descriptions	Detailed description of each message field.

2 Referenced Documents

70-P41183M	DMR External RF Interface Control Document, General Dynamics
IEEE-802.3/ (u, z)	Ethernet Physical Protocol Layer Specifications (IEEE-802.3u/100 Mbps, IEEE-802.3z/Full Duplex)

3 General Ethernet Information

3.1 External RF Ethernet Message Format

The DMR radio communicates with all External RF peripheral devices through physical Layer 2 (MAC) Ethernet packets (Figure 2). External RF Ethernet packets contain overhead (shaded) fields: Preamble, Start Frame Delimiter, and FCS, and user-defined fields: Destination Address, Source Address, Message Length, and RF Data are supplied by External RF LAN subscribers. Overhead fields contain the same data for all messages. Destination Address, Source Address, Message Length, and RF Data fields contain IEEE 802 subscriber-generated (DMR-specific) data. The RF Data field is the (MAC) packet payload. The field has a variable length of 2 to 1500 bytes. All DMR MAC packet payloads include a Priority byte and a Message ID byte. The DMR-specified fields: Destination Address, Source Address, Message Length, and RF Data must have a total length of 64 to 1500 bytes. The RF Data field is padded with (a maximum of 48) '0' value bytes to attain the minimum message length of 64 bytes.

Preamble	Start Frame Delimiter	Destination Address	Source Address	Message Length	RF Data	FCS
(7 bytes)	(1 byte)	(6 bytes)	(6 bytes)	(2 bytes)	(50 - 1500 bytes)	(4 bytes)

Figure 2 DMR (Layer 2) MAC Layer Ethernet Packet

3.1.1 Hardware-Supplied Message Overhead

The 7-byte Preamble, 1-byte Start-Of-Frame, and 4-byte FCS fields are set by the Ethernet driver device. These items are described in applicable Ethernet device data sheets

3.1.2 External RF Addresses

In addition to (optional) response to standard Ethernet addresses, External RF LAN subscribers also respond to four unique ranges (Table 1): Global Multicast, Global Reset Complete Multicast, Channel Multicast, and Device. External RF address ranges are described in the following paragraphs.

Table 1 Network Address Types

Address Type	Address Value
Global Multicast	0D-00-3E-57-49-54
Global Reset Complete Multicast	0D-00-3E-57-49-52
Channel Multicast (excludes Global Reset Complete Multicast address)	0D-00-3E-57-49-xx
Device (single) Component-specific address blocks are listed in applicable DMR External RF LRU ICDs.	0A-00-3E-xx-xx-xx

- **Global Multicast** – messages are generated by External RF LAN bus master devices. Only bus Master devices (Host controllers) can insert Global Multicast values into the Destination Address field. Global messages are processed by all peripherals connected to the LAN. Global messages may have duplicate data fields, one for each configured radio channel. The DMR Global Multicast address is intentionally set to a value different from the standard Ethernet Global address (FF-FF-FF-FF-FF-FF) to allow the use of Global DMR LAN messages, without interference from Commercial-Off-The-Shelf (COTS) devices also connected to the LAN.

- **Global Reset Complete Multicast** – messages are generated by External RF LAN peripherals, and processed only by bus Master devices. All LAN peripheral devices can insert Global Reset Complete Multicast values into the Destination Address field. The unique address avoids confusion with other DMR Global Multicast messages.
- **Channel Multicast** – messages are generated by External RF LAN bus master devices. Only bus Master devices (Host controllers) can insert Channel Multicast values into the Destination Address field. Channel messages are processed by all LAN peripherals assigned to a particular radio channel. Channel addresses are assigned during system setup. LAN devices, such as PA's, respond to all messages with a Destination Address that matches the value assigned (to the device) during setup.
- **Device** – messages are generated by External RF LAN bus master devices. Only bus Master devices (Host controllers) can insert Device values into the Destination Address field. Device messages address a specific component attached to the External RF LAN. Peripheral components respond to all messages containing a Destination Address that matches the MAC address permanently assigned to the device.

3.1.3 Destination Address Field

The Destination Address field always contains the unique MAC address of the message recipient. This applies to all LAN components, even the bus Master.

3.1.4 Source Address Field

The Source Address field always contains the unique MAC address of the message originator. This applies to all LAN components, even the bus Master.

3.1.5 Message Length Field

The two-byte Message Length field is a HEX value of the actual number of data bytes contained in the user-defined RF Data field. The length field always contains a value of at least 2. A message length of '2' indicates the message only contains Message Priority (paragraph 3.1.6.1), and Message ID (paragraph 0) fields, but no data. A Message Length of '3' indicates the message contains the Message Priority and Message ID fields plus a single byte of data (paragraph 3.1.6.3). A message length of '5' indicates the message contains three data bytes. The message length does not include the number of Pad bytes (paragraph) appended to the message data sub-field.

3.1.6 RF Data Field

The DMR Ethernet message RF Data field contains three sub-fields: Message Priority, Message ID, and Message Data (Figure 2). The RF Data field must contain 50 bytes to satisfy the minimum 64 byte length of the DMR Ethernet User Field. The RF Data Field is padded with '0' bytes when needed, and contains the maximum 48 '0' value bytes when the Ethernet message consists only of a Priority and Message ID. The RF Data Field has a maximum length of 1500 bytes. Unused RF Data sub-field bytes must be set to '0'. Figure 3 illustrates the RF Data field byte and bit numbering syntax used throughout this document,

Byte 0	**Byte 1**	**Byte 2-1499**
Message Priority (1-byte)	Message ID (1-byte)	Message Data (48 – 1498 bytes)

D7							D0

Figure 3 RF Data Field Structure

3.1.6.1 Message Priority Sub-Field (Byte 0)

The 1st byte (Byte 0) of the RF Data field structure (Figure 3) identifies the message priority (Figure 4). The priority value is contained in bits 0, 1 of the byte. Table 2 describes the four possible priority values. Any of the priority values may be applied to a command message. The Message Priority sub-field value, contained in a command message, must be copied into the Message Priority sub-field of an associated response message. Command messages may be assigned to any of the four priority levels. Generally, waveforms that do not require the low latency of an immediate priority will not use it.

D 7	D 6	D 5	D 4	D 3	D 2	D 1	D 0
Reserved	Reserved	Reserved	Reserved	Reserved	Reserved	Priority Bit 1	Priority Bit 2

Figure 4 Priority Byte, Bit Descriptions

Table 2 Priority Byte

Priority Bit	Bit 1 (D1)	Bit 2 (D0)
Immediate Priority	1	1
Very Fast Priority	1	0
Fast Priority	0	1
Setup Priority	0	0

3.1.6.2 Message ID Sub-Field (Byte 1)

The 2nd byte (Byte 1) of the RF Data field (Figure 3) contains the Message ID. Table 3 lists the (DMR) defined Message ID field values, the associated message (Command) name, and a short description of the message.

Table 3 External RF Command Summary

Message ID (HEX)	Paragraph	Message Name	Description
00	--	Null	Invalid command
01	4.1	Global Discrete Control	Sets state of T/R, Xmit & Hop Strobe discrete controls for multiple channels.
02	4.2	Channel Discrete Control	Sets state of T/R, Xmit & Hop Strobe discrete controls for single channels.
03	4.3	Device Discrete Control	Sets state of T/R, Xmit & Hop Strobe discrete controls for single device.
04	4.4	Global Frequency Set	Sets parameters for next frequency change of multiple channels.
05	4.5	Channel Frequency Set	Sets parameters for next frequency change of single channel.
06	4.6	Device Frequency Set	Sets parameters for next frequency change of single device.

Message ID (HEX)	Paragraph	Message Name	Description
07	4.7	Global Frequency & Power Set	Sets parameters for next frequency and/or power change for multiple channels.
08	4.8	Channel Frequency & Power Set	Sets parameters for next frequency and/or power change for single channels.
09	4.9	Device Frequency & Power Set	Sets parameters for next frequency and/or power change for single device.
0A	4.10	Global Power Set	Sets Power Out for multiple Channels Simultaneously
0B	4.11	Channel Power Set	Sets Power Out for 1 Channel.
0C	4.12	Device Power Set	Sets Power Out for 1 Device.
0D	4.13	Channel ALC On/Off	Sets internal ALC mode (Automatic Level Control).
0E	4.14	Device ALC On/Off	Sets internal ALC mode (Automatic Level Control).
0F	4.15	Channel XALC On/Off	Sets external ALC mode (Automatic Level Control).
10	4.16	Device XALC On/Off	Sets external ALC mode (Automatic Level Control).
11	4.17	Channel Receive Bypass On/Off	Sets PA Receive Bypass for single channel.
12	4.18	Device Receive Bypass On/Off	Sets PA Receive Bypass for single device.
13	4.19	Global Standby Set	Sets state of Standby operation for multiple channels.
14	4.20	Channel Standby Set	Sets state of Standby operation for single channel.
15	4.21	Device Standby Set	Sets state of Standby operation for single device.
16	4.22	Global Sleep Set	Sets state of Sleep operation for multiple channels.
17	4.23	Channel Sleep Set	Sets state of Sleep operation for single channel.
18	4.24	Device Sleep Set	Sets state of Sleep operation for single device.
19	4.25	Global Mute Set	Sets state of Mute operation for multiple channels.
1A	4.26	Channel Mute Set	Sets state of Mute operation for single channel.
1B	4.27	Device Mute Set	Sets state of Mute operation for single device.
1C	4.28	Global Reset	Sets state of Reset operation for multiple channels.
1D	4.29	Channel Reset	Sets state of Reset operation for single channel.

Message ID (HEX)	Paragraph	Message Name	Description
1E	4.30	Device Reset	Sets state of Reset operation for single device
1F	4.31	Reset Complete	Reports completion of reset/restart operation
20	4.32	Global Path Set	Sets RF distribution path for multiple channels.
21	4.33	Channel Path Set	Sets RF distribution path for single channel.
22	4.34	RFD Mode Set	Set RFD to Blocking or Non-Blocking.
23	4.35	Simple Switch Set	Sets output state of simple SPST or SPDT switch.
24	4.36	Multi-Pole Switch Set	Sets output state of SPNT switch.
25	4.37	Legacy Select Set	Selects one of multiple legacy (SDC) configurations.
26-2B	--	Reserved	Reserved for system expansion.
2C	4.38	Special Test Request	Controls operation of specialized test features
2D	4.38	Fault Clear	Clears stored faults of peripheral devices
2E	4.40	Device Query Request	Requests status information from single device attached to External RF Ethernet bus.
2F	4.41	Command Complete Response	Response message for slow devices and/or devices that have variable delays to commands
30	4.42	Global Query Request	Requests status information from all devices attached to External RF Ethernet bus.
31	4.43	Query Response – Long	Response to device query – long version.
32	4.44	Query Response – Short	Response to device query – short version.
33	4.45	Query Response – ASCII	Response to device query – ASCII version.
34	4.46	Channel Assignment	Assigns radio channel number to devices.
35	4.47	Global Status Request	Request status response from multiple channels.
36	4.48	Device Status Request	Request status response from single device.
37	4.49	Status Response – Power Amplifier	Response to status request – Power Amplifier.
38	4.50	Status Response – RFD Controller	Response to status request – RFD.
39	4.51	Status Response – Tuners	Response to status request – Tuner.
3A	4.52	Status Response – Legacy Controller	Response to status request – Legacy Controller (Signal Data Converter).
3B	4.53	Status response – Interference Canceller (IC)	Response to status request – Interference Canceller device

Message ID (HEX)	Paragraph	Message Name	Description
3C	4.54	ASCII Command	Sends command data to device in ASCII format.
3D	4.55	ASCII Response	Response from peripheral device in ASCII format.
3^E	4.56	Fault Response	Unsolicited fault data from peripheral device.
3F	4.57	Talk Mode Set	Sets talk mode operation for single device.
40	4.58	Command Error	Unsolicited response to last command message, indicating detected error.
41	4.59	Echo Request	Requests immediate response from single device.
42	4.60	Echo Response	Response to Echo Request message.
43	4.61	Local Lockout	Sets local lockout operation of single device.
44	4.62	Discrete Hardwire Option	Sets hardwire control operation of single device.
45	4.63	Waveform Mode	Sets waveform operation of single device
46	4.64	Discrete Delays	Sets response delay times for single device.
47	4.65	Legacy Controller I/O Configuration	Sets configuration of Legacy Controller device (Signal Data Converter).
48	4.66	Legacy Controller Output Command	Sets state of Legacy Controller (Signal Data Converter) I/O configured as output.
49	4.67	Legacy Controller I/O Read Request	Reads state of Legacy Controller (Signal Data Converter) I/O configured as input.
4A	4.68	Legacy Controller I/O Read Response	Response to Legacy Controller (Signal Data Converter) Input Read Request message.
4B	4.69	Waveform Parameters Set	Sets unique waveform parameters.
4C-4F	--	Reserved	Reserved for system expansion.
50	4.70	Global Time Sync	Sets DMR time clock data for all multiple devices.
51	4.71	Device Time Sync	Sets DMR time clock data for single device.
52-5F	--	Reserved	Reserved for system expansion.
60	4.72	Global Power Increment	Sets output power level for multiple devices.
61	4.73	Device Power Increment	Sets output power level for single device.
62	4.74	RF Level Set	Reports available RF level to peripheral
63	4.75	Power Resolution Set	Reports available RF level to peripheral
64-9F	--	Reserved	Reserved for system expansion.
A0	4.76	Global Combo Frequency Set	Sends frequency data for multiple radio channels within a DMR channel for multiple channels.

Message ID (HEX)	Paragraph	Message Name	Description
A1	4.77	Channel Combo Frequency Set	Sends frequency data for multiple radio channels within a DMR channel single channel.
A2-A9	--	Reserved	Reserved for system expansion.
AA – AB	--	Not Used	IEEE LLC
AC-FD	--	Reserved	Reserved for system expansion.
FE	4.78	Software download status	Reports status of latest download packet
FF	4.79	Software download	Downloads software/data to peripheral device

3.1.6.3 Message Data Sub-Field (Byte 2-1499)

The Message Data sub-field (Figure 3) contains the data to transferred from the source to the destination peripheral device(s). The sub-field may contain 48 to 1498 bytes. All unused (non data) bytes are set to ‘0’. Message Data sub-field contents are listed, by message ID, in paragraph 4. The Message Data sub-field is decomposed into multiple elements. Details of the lowest-level message elements are contained in the Message Element Descriptions section of this document (paragraph 5).

4 Detailed Message Descriptions

The following paragraphs describe the RF Data field details of each of the command messages. All messages conform to the structure shown in Figure 2. The Message Priority and Message ID fields are described in the External RF Ethernet Message Format paragraph of this document. The numbers in the upper row of the field descriptions indicate the relative position of the byte(s) inside the RF Data field. The (parenthesized) field numbers point to the applicable descriptive paragraph in the Message Element Descriptions section of this document. All reserved (not-used) fields are set to 0x00 by the message originator. Reserved field default values will remain set to HEX value 0x00 (null character) as they are put into use.

4.1 Global Discrete Control (01H) Message

Destination Address Type: **Global Multicast** Message ID: **01H** Message Message Length: **22+**

The Global Discrete Control message configures the discrete controls of all RF devices attached to any/all of the four DMR radio channels. All network devices are assigned to a DMR radio channel. Multiple channel devices, such as Legacy controllers (Signal Data Converter), configure the discrete controls of each applicable channel device, but not itself. Message length is determined by the number of radio channels defined for the specific the DMR installation, each having a Discrete Control field in the message. The message length field accounts for all radio channels. Configuration data is contained inside the Channel 'x' Discrete Control structures (paragraph 4.1.1).

0	1	2 - 6	7 - 11	12 - 16	17 – 21	n*5-3 – n*5+1
Message Priority	Message ID	Channel 1 Discrete Control (4.1.1)	Channel 2 Discrete Control (4.1.1)	Channel 3 Discrete Control (4.1.1)	Channel 4 Discrete Control (4.1.1)	Channel n Discrete Control (4.1.1)

4.1.1 Discrete Control Structure

The five-byte Discrete Control structure contains the following parameters; Duplex (Half, Full), Transmit Key (PTT), Frequency Strobe, Spare Discrete #1, and Spare Discrete #2 fields. The Discrete Spare fields support future implementation of currently unused Modem discrete outputs. Spare fields are always set to "0x00" (HEX). Structure elements are defined in the Message Field Descriptions section of this document. The same structure is used in Global, Channel, and Device Discrete Control messages. .

s	s+1	s+2	s+3	s+4
Duplex (5.2.8)	Transmit Key (5.2.22)	Frequency Strobe (5.2.10)	Spare Discrete #1	Spare Discrete #2

4.2 Channel Discrete Control (02H) Message

Destination Address Type: **Channel Multicast** Message ID: **02H** Message Length: **7**

The Channel Discrete Control message configures the discrete controls of all RF devices attached to a single radio channel. A radio channel may consist of several devices. Configuration data is contained inside the Channel Discrete Control structure, and is the same as used with the Global Discrete Control message.

0	1	2 - 6
Message Priority	Message ID	Discrete Control (4.1.1)

4.3 Device Discrete Control (03H) Message

Destination Address Type: **Device** Message ID: **03H** Message Length: **7**

The Device Discrete Control message configures the discrete controls of a single RF device. Configuration data is contained inside the Device Discrete Control structure, and is the same as used with the Global Discrete Control message.

0 Message Priority	1 Message ID	2 - 6 Discrete Control (4.1.1)

4.4 Global Frequency Set (04H) Message

Destination Address Type: **Global Multicast** Message ID: **04H** Message Length: **26+**

The Global Frequency Set message configures all RF devices attached to any/all of the four DMR radio channels for operation with the next radio frequency. All network devices are assigned to a DMR radio channel. Multiple channel devices, such as Legacy controllers (Signal Data Converter), configure the operation of each applicable channel device, but not itself. Message length is determined by the number of radio channels defined for the specific the DMR installation, with each channel having a Frequency Parameter structure. The length field accounts for all radio channels. Configuration data is contained in the Channel ‘x’ Frequency Parameters structures (paragraph 4.4.1).

0 Message Priority	1 Message ID	2 - 7 Channel 1 Frequency Parameters (4.4.1)	8 - 13 Channel 2 Frequency Parameters (4.4.1)	14 - 19 Channel 3 Frequency Parameters (4.4.1)	20 - 25 Channel 4 Frequency Parameters (4.4.1)	n*6-4 – n*6+1 Channel n Frequency Parameters (4.4.1)

4.4.1 Frequency Parameters Structure

The six-byte Channel ‘X’ Frequency Parameters structure contains the following parameters: Frequency Command, Frequency Resolution, and Frequency Base. The same Frequency Parameters structure is used in Global, Channel, and Device Frequency Set messages.

s Effectivity Command (5.3.17)	s+1 Frequency Resolution (5.3.19)	s+2 - s+5 Frequency Base (5.3.15)

4.5 Channel Frequency Set (05H) Message

Destination Address Type: **Channel Multicast** Message ID: **05H** Message Length: **8**

The Channel Frequency Set message configures all RF devices attached to one of the DMR radio channels for operation with the next radio frequency. Configuration parameters are the contained in the Channel Frequency Parameters structure, and is the same as used with the Global Frequency Set message. RF components can be pre-loaded or set to the frequency contained in the parameter structure.

0 Message Priority	1 Message ID	2 - 7 Frequency Parameters (4.4.1)

4.6 Device Frequency Set (06H) Message

Destination Address Type: **Device** Message ID: **06H** Message Length: **8**

The Device Frequency Set message configures a single RF device attached to one of the DMR radio channels for operation with the next radio frequency. Configuration parameters are the contained in the Device Frequency Parameters structure, and is the same as used with the Global Frequency Set message. RF components can be pre-loaded or set to the frequency contained in the parameter structure.

0 Message Priority	1 Message ID	2 - 7 Frequency Parameters (4.4.1)

4.7 Global Frequency and Power Set (07H) Message

Destination Address Type: **Global Multicast** Message ID: **07H** Message Length: **34+**

The Global Frequency and Power Set message configures all RF devices attached to any/all of the four DMR radio channels for operation with the next radio frequency or power setting. All network devices are assigned to a DMR radio channel. Multiple channel devices, such as Legacy controllers (Signal Data Converter), configure the operation of each applicable channel device, but not itself. Message length is determined by the number of radio channels defined for the specific the DMR installation, with each channel having a Frequency and Power Parameter structure in the message. The message length field accounts for all radio channels. Configuration parameters are contained in the Channel 'x' Frequency and Power Parameters structures (paragraph 4.7.1).

0 Message Priority	1 Message ID	2 - 9 Channel 1 Frequency and Power Parameters (4.7.1)	10 - 17 Channel 2 Frequency and Power Parameters (4.7.1)	18 - 25 Channel 3 Frequency and Power Parameters (4.7.1)	26 - 33 Channel 4 Frequency and Power Parameters (4.7.1)	n*8-6 – n*8+1 Channel n Frequency and Power Parameters (4.7.1)

4.7.1 Frequency and Power Parameters Structure

The eight-byte Frequency and Power Parameters field contains the following parameters; Frequency Command, Frequency Resolution, Frequency Base, RF Power Level, and Waveform Power Ratio.

s Effectivity Command (5.3.17)	s+1 Frequency Resolution (5.3.19)	s+2 - s+5 Frequency Base (5.3.15)	s+6 RF Power Level – Signed, 1 dB (5.3.37)	s+7 Waveform Power Ratio (5.3.56)

4.8 Channel Frequency and Power Set (08H) Message

Destination Address Type: **Channel Multicast** Message ID: **08H** Message Length: **10**

The Channel Frequency and Power Set message configures all RF devices attached to one of the DMR radio channels for operation with the next radio frequency and/or power level. Configuration parameters are the contained in the Channel Frequency and Power Parameters structure, and is the same as used with the Global Frequency and Power Set message. RF components can be pre-loaded or set to the frequency and/or power level contained in the parameter structure.

0 Message Priority	1 Message ID	2 - 9 Frequency and Power Parameters (4.7.1)

4.9 Device Frequency and Power Set (09H) Message

Destination Address Type: **Device** Message ID: **09H** Message Length: **10**

The Device Frequency and Power Set message configures a single RF device attached to one of the DMR radio channels for operation with the next radio frequency and/or power level. Configuration parameters are the contained in the Device Frequency and Power Parameters structure, and is the same as used with the Global Frequency and Power Set message. RF components can be pre-loaded or set to the frequency and/or power level contained in the parameter structure.

0 Message Priority	1 Message ID	2 - 9 Frequency and Power Parameters (4.7.1)

4.10 Global Power Set (0AH) Message

Destination Address Type: **Global Multicast** Message ID: **0AH** Message Length: **10+**

The Global Power Set message configures all RF devices attached to any/all of the four DMR radio channels for operation with the next radio power setting. All network devices are assigned to a DMR radio channel. Multiple channel devices, such as Legacy controllers (Signal Data Converter), configure the power level of each applicable channel device, but not itself. Message length is determined by the number of radio channels defined for the specific the DMR installation, with each channel having RF Power Level and Waveform Power Ratio fields in the message. The new power setting is contained in the Channel 'x' RF Power Level field.

0 Message Priority	1 Message ID	2 – 3 Channel 1 RF Power Parameters (4.10.1)	4 – 5 Channel 2 RF Power Parameters (4.10.1)	6 – 7 Channel 3 RF Power Parameters (4.10.1)	8 – 9 Channel 4 RF Power Parameters (4.10.1)	n*2 – n*2+1 Channel n RF Power Parameters (4.10.1)

4.10.1 RF Power Parameters Structure

The two-byte RF Power Parameters field contains the following parameters; RF Power Level, and Waveform Power Ratio.

s RF Power Level – Signed, 1dB (5.3.37)	s+1 Waveform Power Ratio (5.3.56)

4.11 Channel Power Set (0BH) Message

Destination Address Type: **Channel Multicast** Message ID: **0BH** Message Length: **4**

The Channel Power Set message configures all RF devices attached to one of the four DMR radio channels for operation with the next radio power setting. The new power setting is contained in the Channel RF Power Level field. The Waveform Power Ratio field preloads amplifier gain for AM waveforms.

0 Message Priority	1 Message ID	2 – 3 RF Power Parameters (4.10.1)

4.12 Device Power Set (0CH) Message

Destination Address Type: **Device** Message ID: **0CH** Message Length: **4**

The Device Power Set message configures a single RF device for operation with the next radio power setting. The new power setting is contained in the Device RF Power Level field. The Waveform Power Ratio field preloads amplifier gain for AM waveforms.

0 Message Priority	1 Message ID	2 – 3 RF Power Parameters (4.10.1)

4.13 Channel ALC ON/OFF (0DH) Message

Destination Address Type: **Channel Multicast** Message ID: **0DH** Message Length: **5**

The Channel ALC ON/OFF message configures Automatic Level Control operation of all devices of a single radio channel to the configuration described by the Automatic Level Control and ALC Slew Rate fields. ALC ON/OFF messages differ from External ALC ON/OFF messages only by message ID. Release note: the ALC Slew Rate field is available for 6.3.1.1 use, reported by ALC-capable power amplifiers.

0 Message Priority	1 Message ID	2 Automatic Level Control (5.2.1)	3 Reserved	4 ALC Slew Rate (5.3.1)

4.14 Device ALC ON/OFF (0EH) Message

Destination Address Type: **Device** Message ID: **0EH** Message Length: **5**

The Device ALC ON/OFF message configures Automatic Level Control operation of a single external RF network device to the configuration described by the Automatic Level Control and ALC Slew Rate fields. ALC ON/OFF messages differ from External ALC ON/OFF messages only by message ID. Release note: the ALC Slew Rate field is available for 6.3.1.1 use, reported by ALC-capable power amplifiers.

0 Message Priority	1 Message ID	2 Automatic Level Control (5.2.1)	3 Reserved	4 ALC Slew Rate (5.3.1)

4.15 Channel External ALC ON/OFF (0FH) Message

Destination Address Type: **Channel Multicast** Message ID: **0FH** Message Length: **5**

The Channel External ALC ON/OFF message configures Automatic Level Control operation of all devices of a single radio channel to the configuration described by the Automatic Level Control and ALC Slew Rate fields. External ALC ON/OFF messages differ from ALC ON/OFF messages only by message ID. Release note: the ALC Slew Rate field is available for 6.3.1.1 use, reported by ALC-capable power amplifiers.

0 Message Priority	1 Message ID	2 Automatic Level Control (5.2.1)	3 Reserved	4 ALC Slew Rate (5.3.1)

4.16 Device External ALC ON/OFF (10H) Message

Destination Address Type: **Device** Message ID: **10H** Message Length: 5

The Device External ALC ON/OFF message configures Automatic Level Control operation of a single external RF network device to the operational state contained in the Automatic Level Control and ALC Slew Rate fields. External ALC ON/OFF messages differ from ALC ON/OFF messages only by message ID. Release note: the ALC Slew Rate field is available for 6.3.1.1 use, reported by ALC-capable power amplifiers.

0	1	2	3	4
Message Priority	Message ID	Automatic Level Control (5.2.1)	Reserved	ALC Slew Rate (5.3.1)

4.17 Channel Receive Bypass ON/OFF (11H) Message

Destination Address Type: **Channel Multicast** Message ID: **11H** Message Length: **3**

The Channel Receive Bypass ON/OFF message configures receiver bypass operation of all devices of a single radio channel to the operational state contained in the Channel Receiver Bypass field.

0	1	2
Message Priority	Message ID	Receiver Bypass (5.2.17)

4.18 Device Receive Bypass ON/OFF (12H) Message

Destination Address Type: **Device** Message ID: **12H** Message Length: **3**

The Device Receive Bypass ON/OFF message configures receiver bypass operation of a single device of a single radio channel to the operational state contained in the Device Receiver Bypass field.

0	1	2
Message Priority	Message ID	Receiver Bypass (5.2.17)

4.19 Global Standby Set (13H) Message

Destination Address Type: **Global Multicast** Message ID: **13H** Message Length: **6+**

The Global Standby Set message configures the standby operation of all devices of any/all radio channels to the operational state contained in the Channel ‘x’ Standby Mode fields. All network devices are assigned to a DMR radio channel. Multiple channel devices, such as Legacy controllers (Signal Data Converter), configure the standby operation of each applicable channel device, but not itself. Message length is determined by the number of radio channels defined for the specific the DMR installation, with each channel having a Standby Mode field in the message.

0	1	2	3	4	5	n+1
Message Priority	Message ID	Channel 1 Standby Mode (5.2.20)	Channel 2 Standby Mode (5.2.20)	Channel 3 Standby Mode (5.2.20)	Channel 4 Standby Mode (5.2.20)	Channel n Standby Mode (5.2.20)

4.20 Channel Standby Set (14H) Message

Destination Address Type: **Channel Multicast** Message ID: **14H** Message Length: **3**

The Channel Standby Set message configures the standby operation of all devices of a single radio channel to the operational state contained in the Channel Standby Mode field.

0 Message Priority	1 Message ID	2 Standby Mode (5.2.20)

4.21 Device Standby Set (15H) Message

Destination Address Type: **Device** Message ID: **15H** Message Length: **3**

The Device Standby Set message configures the standby operation of a single radio device to the operational state contained in the Device Standby Mode field.

0 Message Priority	1 Message ID	2 Standby Mode (5.2.20)

4.22 Global Sleep Set (16H) Message

Destination Address Type: **Global Multicast** Message ID: **16H** Message Length: **6+**

The Global Sleep Set message configures the low-power “sleep” operation of all devices of any/all radio channels to the operational state contained in the Channel ‘x’ Sleep Mode fields. All network devices are assigned to a DMR radio channel. Multiple channel devices, such as Legacy controllers (Signal Data Converter), configure the “sleep” operation of each applicable channel device, but not itself. Message length is determined by the number of radio channels defined for the specific the DMR installation, with each channel having a Sleep Mode field in the message.

0 Message Priority	1 Message ID	2 Channel 1 Sleep Mode (5.2.19)	3 Channel 2 Sleep Mode (5.2.19)	4 Channel 3 Sleep Mode (5.2.19)	5 Channel 4 Sleep Mode (5.2.19)	n+1 Channel n Sleep Mode (5.2.19)

4.23 Channel Sleep Set (17H) Message

Destination Address Type: **Channel Multicast** Message ID: **17H** Message Length: **3**

The Channel Sleep Set message configures the low-power “sleep” operation of all devices of a single radio channel to the operational state contained in the Channel Sleep Mode field.

0 Message Priority	1 Message ID	2 Sleep Mode (5.2.19)

4.24 Device Sleep Set (18H) Message

Destination Address Type: **Device** Message ID: **18H** Message Length: **3**

The Device Sleep Set message configures the low-power “sleep” operation of a single radio device to the operational state contained in the Device Sleep Mode field.

0	1	2
Message Priority	Message ID	Sleep Mode (5.2.19)

4.25 Global Mute Set (19H) Message

Destination Address Type: **Global Multicast** Message ID: **19H** Message Length: **6+**

The Global Mute Set message configures the muted (silenced output) operation of all devices of any/all radio channels to the operational state contained in the Channel ‘x’ Mute Enable fields. All network devices are assigned to a DMR radio channel. Multiple channel devices, such as Legacy controllers (Signal Data Converter), configure the “mute” operation of each applicable channel device, but not itself. Message length is determined by the number of radio channels defined for the specific the DMR installation, with each channel having a Mute Enable field in the message.

0	1	2	3	4	5	n+1
Message Priority	Message ID	Channel 1 Mute Enable (5.2.12)	Channel 2 Mute Enable (5.2.12)	Channel 3 Mute Enable (5.2.12)	Channel 4 Mute Enable (5.2.12)	Channel n Mute Enable (5.2.12)

4.26 Channel Mute Set (1AH) Message

Destination Address Type: **Channel Multicast** Message ID: **1AH** Message Length: **3**

The Channel Mute Set message configures the muted (silenced output) operation of all devices of a single radio channel to the operational state contained in the Channel Mute Enable field.

0	1	2
Message Priority	Message ID	Mute Enable (5.2.12)

4.27 Device Mute Set (1BH) Message

Destination Address Type: **Device** Message ID: **1BH** Message Length: **3**

The Device Mute Set message configures the muted (silenced output) operation of a single radio device to the operational state contained in the Device Mute Enable field.

0	1	2
Message Priority	Message ID	Mute Enable (5.2.12)

4.28 Global Reset (1CH) Message

Destination Address Type: **Global Multicast** Message ID: **1CH** Message Length: **6+**

The Global Reset message commands network devices to/not perform RESET operations, as determined by the state of the applicable Channel Reset control field. All network devices are assigned to a DMR radio channel. Multiple channel devices, such as Legacy controllers (Signal Data Converter), resets each applicable channel device, but not itself. Message length is determined by the number of radio channels defined for the specific the DMR installation, each having a Reset control field in the message. The message length field accounts for all radio channels.

0	1	2	3	4	5	n+1
Message Priority	Message ID	Channel 1 Reset (5.2.18)	Channel 2 Reset (5.2.18)	Channel 3 Reset (5.2.18)	Channel 4 Reset (5.2.18)	Channel n Reset (5.2.18)

4.29 Channel Reset (1DH) Message

Destination Address Type: **Channel Multicast** Message ID: **1DH** Message Length: **3**

The Channel Reset message commands specific radio channel network devices to/not perform RESET operations, as determined by the state of the Reset control field. All network devices are assigned to a DMR radio channel. Multiple channel devices, such as Legacy controllers (Signal Data Converter), resets the addressed (attached) channel device, but not itself.

0	1	2
Message Priority	Message ID	Reset (5.2.18)

4.30 Device Reset (1EH) Message

Destination Address Type: **Device** Message ID: **1EH** Message Length: **3**

The Device Reset message commands a specific network device to/not perform RESET operations, as determined by the state of the Reset control field. Multiple channel devices, such as Legacy controllers (Signal Data Converter), resets itself, which may effectively reset all attached channel devices.

0	1	2
Message Priority	Message ID	Reset (5.2.18)

4.31 Reset Complete (1FH) Message

Destination Address Type: **Global Multicast** Message ID: **1FH** Message Length: **3**

The Reset Complete message reports that a LAN device has completed an internal reset/start-up sequence. The message originator is identified by the Source Address field value. The message is always sent to unique Global address 0D 00 3E 57 49 52. The Destination Address value is readily recognized by the bus master, yet avoids confusion of other Global messages (addressed to global address: 0D 00 3E 57 49 54). Message originator status is reported in the Reset Status field

0	1	2
Message Priority	Message ID	Reset Status (5.3.34)

4.32 Global Path Set (20H) Message

Destination Address Type: **Global Multicast** Message ID: **20H** Message Length: **6+**

The Global Path Set message is reserved for system growth.

0	1	2	3	4	5	n+1
Message Priority	Message ID	Channel 1 RFD Channel Path (5.3.41)	Channel 2 RFD Channel Path (5.3.41)	Channel 3 RFD Channel Path (5.3.41)	Channel 4 RFD Channel Path (5.3.41)	Channel n RFD Channel Path (5.3.41)

4.33 Channel Path Set (21H) Message

Destination Address Type: **Channel Multicast** Message ID: **21H** Message Length: **3**

The Channel Path Set message is reserved for system growth.

0	1	2
Message Priority	Message ID	RFD Channel Path (5.3.41)

4.34 RFD Mode Set (22H) Message

Destination Address Type: **Device** Message ID: **22H** Message Length: **3**

The RFD Mode Set message is reserved for system growth.

0	1	2
Message Priority	Message ID	Blocking Mode (5.2.6)

4.35 Simple Switch Set (23H) Message

Destination Address Type: **Device** Message ID: **23H** Message Length: **4**

The Simple Switch Set message sets the output state of a Single-Pole-Single-Throw (SPST) or Single-Pole-Double-Throw (SPDT) logic device to the state contained in the Simple Switch Position field. The Switch Number field identifies which device output (of multiple output devices) is affected by the message.

0	1	2	3
Message Priority	Message ID	Switch Number (5.3.43)	Simple Switch Position (5.3.42)

4.36 Multi-pole Switch Set (24H) Message

Destination Address Type: **Device** Message ID: **24H** Message Length: **4**

The Multi-pole Switch Set message sets the output state a single multiple-position logic device to the position (value) contained in the Multi-pole Switch Position field. The Switch Number field identifies which device output (of multiple output devices) is affected by the message.

0	1	2	3
Message Priority	Message ID	Switch Number (5.3.43)	Multi-pole Switch Position (5.3.27)

4.37 Legacy Select Set (25H) Message

Destination Address Type: **Device** Message ID: **25H** Message Length: **3**

The Legacy Select Set message selects one of multiple device legacy controller (Signal Data Converter) configurations. Specific firmware may have to be downloaded to support operation of the selected legacy device configuration.

0	1	2
Message Priority	Message ID	Legacy Device (Mode) Select (5.3.26)

4.38 Special Test Request (2C) Message

Destination Address Type: **Device** Message ID: **2CH** Message Length: **3**

The Special Test Request message configures peripheral hardware to support special test operations – those not covered by conventional built-in-test (paragraph 4.48). Special(ized) tests may augment, and be used separate from, conventional built-in-test to verify peripheral performance. Release note: Special Test Request message capability is supported by the 500W PA, for DMR build 6.4.0.2

0	1	2
Message Priority	Message ID	Test – Loop Back (5.2.21)

4.39 Fault Clear (2D) Message

Destination Address Type: **Device** Message ID: **2DH** Message Length: **2**

The Fault Clear message clears all faults stored in peripheral memory at the time the message is received.

0	1
Message Priority	Message ID

4.40 Device Query Request (2E) Message

Destination Address Type: **Device** Message ID: **2EH** Message Length: **3**

The Query message prompts a single peripheral device attached to the External RF Ethernet bus (identified by message destination MAC address) to respond with the type message identified in the Response Message Type field. Response messages are described in paragraphs 4.43 through 4.45. Release note: this message is supported by all power amplifiers, including the 100W, 200W, 100W-A, 200W-A and 500W PAs,

0 Message Priority	1 Message ID	2 Response Message Type (5.3.35)

4.41 Command Complete Response (2FH) Message

Destination Address Type: **Device** Message ID: **2FH** Message Length: **4**

The Command Complete Response message reports that a previous command message has been completed. The message priority is the same value set by the Device Discrete Hardware Option (44H). The response message is sent only when the device's Talk mode is set to PEER. The device may be processing several commanded tasks (such as frequency or power set messages) at the same time. Therefore, the device transmits a Command Complete message upon completion of each task. The device does not send Command Complete response messages for commands that request specific responses, such as Query messages.

0 Message Priority	1 Message ID	2 Tasking Message ID (5.3.47)	3 Channel Number (5.3.3)

4.42 Global Query Request (30H) Message

Destination Address Type: **Global Multicast** Message ID: **30H** Message Length: **3**

The Global Query Request message prompts all peripheral devices attached to the External RF Ethernet bus to respond with the type message identified in the Response Message Type field. Response messages are described in paragraphs 4.43 through 4.45. To accommodate legacy DMR RF Control algorithms, all External RF network devices must respond to Global Query Request messages addressed to all network components (Global address) OR to a specific component (Device address). Release note: this message is supported by all power amplifiers, including the 100W, 200W, 100W-A, 200W-A and 500W PAs.

0 Message Priority	1 Message ID	2 Response Message Type (5.3.35)

4.43 Query Response – Long (31H) Message

Destination Address Type: **Device (to bus Master)** Message ID: **31H** Message Length: **120 - 1499**

The Query Response – Long message is transmitted to the bus master when the associated Device Query message requests a "Long" response message. The Frequency Limit – High, Frequency Limit –Low, Max Power In, and Max Power Out fields indicate capability limits of the device, not the current state of programmable parameters: input power and output power. Release note: post (-) version of this document may implement Field 12 for Vendor ID, having a numeric value 0 to 255. Fields 13 through 15 will remain "reserved".

4.43.1 Power Amplifier Long Response Message Structure

The following table lists the contents of the power amplifier "long" response message. Field details are contained in this document at the listed links. Component-specific text strings such as Component Title, Device Part Number, and version numbers are listed in the applicable (power amplifier device) Ethernet message ICD. Release note: All power amplifiers support the use of this message, including the 100W, 200W, and 100W-A (6.3.1.1), 500W (6.4.0.2), and 200W-A (TBD) PAs. Due to unique implementation details, the message contains fields not reported by all PAs, specifically, the fields beyond byte location 120. Actual message contents are listed in individual PA Ethernet message ICDs.

0 Message Priority	1 Message ID	2 Device Type – Network (5.3.11)	3 BIT Status (5.2.5)	4 - 5 Frequency Limit - High (5.3.18)	6 – 7 Frequency Limit – Low (5.3.18)
8 Max Power In signed, 1 dB (5.3.37)	9 Max Power Out signed, 1 dB (5.3.37)	10 Number of Channels (5.3.28)	11 Command Speed Type (5.3.5)	12 – 15 Reserved	16 – 23 Serial Number (5.1.8)
24 – 47 Component Title – PA Title (5.1.3)	48 – 63 Label – PA Part Number (5.1.10)	64 – 71 PA Part Number (5.1.7)	72 – 87 Label – PA HW Version (5.1.10)	88 – 95 Version ID – PA Hardware (5.1.11)	96 – 111 Label – PA App Software (5.1.10)
112 – 119 Version ID – PA App Software (5.1.11)	120 – 135 Label – PA Boot Software (5.1.10)	136 – 143 Version ID – PA Boot Software (5.1.11)	144 – 159 Label – PA FPGA (5.1.10)	160 – 167 Version ID – PA FPGA (5.1.11)	168 – 183 Label – E-net Part Number (5.1.10)
184 – 199 E-net Part Number (5.1.7)	200 – 215 Label – E-net Serial Number (5.1.10)	216 – 223 E-net Serial Number (5.1.8)	224 – 239 Label – E-net Hardware Version (5.1.10)	240 – 247 Version ID – E-net Hardware (5.1.11)	248 – 263 Label – E-net APP Software Version (5.1.10)
264 – 271 Version ID – E-net APP Software (5.1.11	272 – 287 Label – E-net Boot Software Version (5.1.10)	288 – 295 Version ID – E-net Boot Software (5.1.11	296 – 311 Label – E-net FPGA (5.1.10)	312 – 319 Version ID – E-net FPGA (5.1.11)	320 – 1499 Reserved

4.43.2 Legacy Controller Long Response Message Structure

The following table lists the contents of the Legacy Controller (Signal Data Converter) “long” response message. Field details are contained in this document at the listed links. Component-specific text strings such as Component Title, Device Part Number, and version numbers are listed in the applicable (power amplifier device) Ethernet message ICD. Release note: the following information is reported by all fielded versions of fielded SDC software, as of DMR build 6.3.1.1.

0 Message Priority	1 Message ID	2 Device Type – Network (5.3.11)	3 BIT Status (5.2.5)	4 - 5 Frequency Limit - High (5.3.18)	6 - 7 Frequency Limit – Low (5.3.18)
8 Max Power In signed, 1 dB (5.3.37)	9 Max Power Out signed, 1 dB (5.3.37)	10 Number of Channels (5.3.28)	11 Command Speed Type (5.3.5)	12 – 15 Reserved	16 – 23 Serial Number (5.1.8)
24 – 33 Part Number (5.1.7)	34 – 49 Hardware Version (5.1.11)	50 – 65 Software Version (5.1.11)	66 – 73 FPGA Version (5.1.11)	74 – 89 Legacy Controller Configuration (5.1.6)	90 Fiber Optic Capability (5.1.5)
91 – 94 ROM Test Status (5.1.9)	94 – 97 RAM Test Status (5.1.9)	98 – 101 Ethernet Test Status (5.1.9)	102 – 105 UART Test Status (5.1.9)	106 – 109 FPGA Test Status (5.1.9)	

4.44 Query Response – Short (32H) Message

Destination Address Type: **Device (to bus Master)** Message ID: **32H** Message Length: **4**

The Query Response – Short message is transmitted to the bus master when the received Device Query message requests a “Short” response message. On multiple channel devices, such as the Legacy Controller (Signal Data Converter), the Device Type, and BIT Status fields apply to the controller, and not to the attached devices.

0 Message Priority	1 Message ID	2 Device Type - Network (5.3.11)	3 BIT Status (5.2.5)

4.45 Query Response – ASCII (33H) Message

Destination Address Type: **Device (to bus Master)** Message ID: **33H** Message Length: **106 - 1499**

The Query Response – ASCII message is transmitted to the bus master when the associated Global Device Query message requests an "ASCII" response message. Generic field descriptions for power amplifier devices are contained in this document at the listed links. Component-specific text strings are listed in the applicable (device) Ethernet message ICD. The Legacy controller (Signal Data Converter) lists only Serial Number. See the Legacy Controller (Signal Data Converter) Ethernet message ICD for details. Release note: post (-) version of this document may implement Field 172 for Vendor ID, having a numeric value 0 to 255. Fields 173 through 1499 will remain "reserved".

4.45.1 VHF/UHF Power Amplifier ASCII Response Message Structure

The following table lists the contents of the VHF/UHF power amplifier "ASCII" response message. Field details are contained in this document at the listed links. Component-specific text strings such as Device Part Number, and version numbers are listed in the applicable (power amplifier device) Ethernet message ICD. Release note: All VHF/UHF power amplifiers support the use of this message, including the 100W, 200W, 100W-A (6.3.1.1), and 200W-A (6.4.1) PAs. Due to unique implementation details, the message contains fields not reported by all PAs. Actual message contents are listed in individual PA Ethernet message ICDs.

0 Message Priority	1 Message ID	2 – 9 Serial Number (5.1.8)	10 – 33 Component Title PA Title (5.1.3)	34 – 49 Label – PA Part Number (5.1.10)	50 – 57 PA Part Number (5.1.7))
58 – 73 Label – HW Version (5.1.10)	74 – 81 Version ID – Device Hardware (5.1.11)	82 – 97 Label – PA App Software (5.1.10)	98 – 105 Version ID – PA App Software (5.1.11)	106 – 121 Label – PA Boot Software (5.1.10)	122 – 129 Version ID – PA Boot Software (5.1.11)
130 – 145 Label – PA FPGA (5.1.10)	146 – 153 Version ID – PA FPGA (5.1.11)	154 – 169 Label – E-net Part Number (5.1.10)	170 – 185 E-net Part Number (5.1.7)	186 – 201 Label – E-net Serial Number (5.1.10)	202 – 209 E-net Serial Number (5.1.8)
210 – 225 Label – E-net Hardware Version (5.1.10)	226 – 233 Version ID – E-net Hardware (5.1.11)	234 – 249 Label – E-net APP Software Version (5.1.10)	250 – 257 Version ID – E-net APP Software (5.1.11	258 – 273 Label – E-net Boot Software Version (5.1.10)	274 – 281 Version ID – E-net Boot Software (5.1.11
282 – 297 Label – E-net FPGA (5.1.10)	298 – 305 Version ID – E-net FPGA (5.1.11)	306 – 1499 Reserved			

4.45.2 HF Power Amplifier ASCII Response Message Structure

The following table lists the contents of the HF power amplifier "ASCII" response message. Field details are contained in this document at the listed links. Component-specific text strings such as Device Part Number, and version numbers are listed in the applicable (power amplifier device) Ethernet message ICD. Release note: The 500W HF power amplifier supports the use of this message.

0 Message Priority	1 Message ID	2 – 17 Label – Part Number (5.1.10)	18 – 25 Device Part Number (5.1.7)	26 – 41 Label – Serial Number (5.1.10)	42 – 49 Serial Number (5.1.8)
50 – 65 Label – HW Version (5.1.10)	66 – 73 Version ID – Device Hardware (5.1.11)	74 – 89 Label – Application Software (5.1.10)	90 – 97 Version ID – Application Software (5.1.11)	98 – 113 Label – Boot Software (5.1.10)	114 – 121 Version ID – Boot Software (5.1.11)
122 – 137 Label – Ethernet Software (5.1.10)	138 – 145 Version ID – Ethernet Software (5.1.11)	146 – 161 Label – FPGA (5.1.10)	162 – 171 Version ID – FPGA (5.1.11)	172 - 1499 Reserved	

4.45.3 Legacy Controller ASCII Response Message Structure

The following table lists the contents of the Legacy Controller (Signal Data Converter) "ASCII" response message. Release note: the 6.3.1.1 SDC ASCII Query response message only contains Serial Number. The message will be expanded to include data fields similar to the Power Amplifier ASCII response message at the time DMR decides to use the message.

0 Message Priority	1 Message ID	2 – 10 Serial Number (5.1.8)	11 – 1499 Reserved

4.46 Channel Assignment (34H) Message

Destination Address Type: **Device** Message ID: **34H** Message Length: **30+**

The Channel Assignment message attaches RF peripheral device ports to DMR radio channels. The radio must configure all peripheral devices with this message prior to attempting control through the use of Global Multicast or Channel Multicast messages.

Channel assignments are defined by each of the message's Channel Number and Channel Address field-pairs. Each field-pair maps one device port to a radio channel. A power amplifier is considered a single port device. Its only port is mapped to the radio channel defined by the First-Port fields (bytes 2, 3 – 8). The Legacy Controller (Signal Data Converter) is a multi-port device. Its four I/O ports are mapped to radio channels defined by all message field-pairs (port 1 = bytes 2, 3 – 8; port 2 = bytes 9, 10 – 15; etc). Channel Number fields point to Global message data fields. Channel Address fields point to Channel Multicast message destination MAC address fields.

Channel Number field values describe where port data can be found in Global Multicast messages. Device port #1 data is found in Global message field '4' when its Channel Number field has been previously set to '4'. The Channel Number field can have a value of 1 .. n, although the DMR architecture currently supports only four channels (1..4).

Channel Address fields contain MAC addresses. Device port data is extracted from Channel Multicast messages with destination addresses set to the same value contained in Channel Address fields. Device port #1 responds to Channel #4 messages (i.e. 0A-00-3E-57-49-04) when the Channel Address field has been previously set to the same value.

Channel Number and Channel Address values may appear in any numerical order, and may repeat (Figure 5). Device port #1 could be assigned to radio channel #4 (Channel Number field = 4), while port #2 is assigned to radio channel #3, and ports #3 and #4 assigned to radio channel #2. The Channel Number and Channel Address field-pairs always point to the same radio channel, i.e.: Channel Number = '1', Channel Address = channel '1' MAC address.

The number of Channel Number/Channel Address field-pairs determines the total message length. The DMR architecture currently accommodates four channels (1..4). Channel 'n' fields indicate system growth.

0 Message Priority	1 Message ID	2 Self, First Channel Number (5.3.3)	3 – 8 Self, First Channel Address (5.3.9)	9 Second Channel Number (5.3.3)	10 – 15 Second Channel Address (5.3.9)
		16 Third Channel Number (5.3.3)	17 – 22 Third Channel Address (5.3.9)	23 Fourth Channel Number (5.3.3)	24 – 29 Fourth Channel Address (5.3.9)
		n*7-5 nth Channel Number (5.3.3)	n*7-4 – n*7+1 nth Channel Address (5.3.9)		

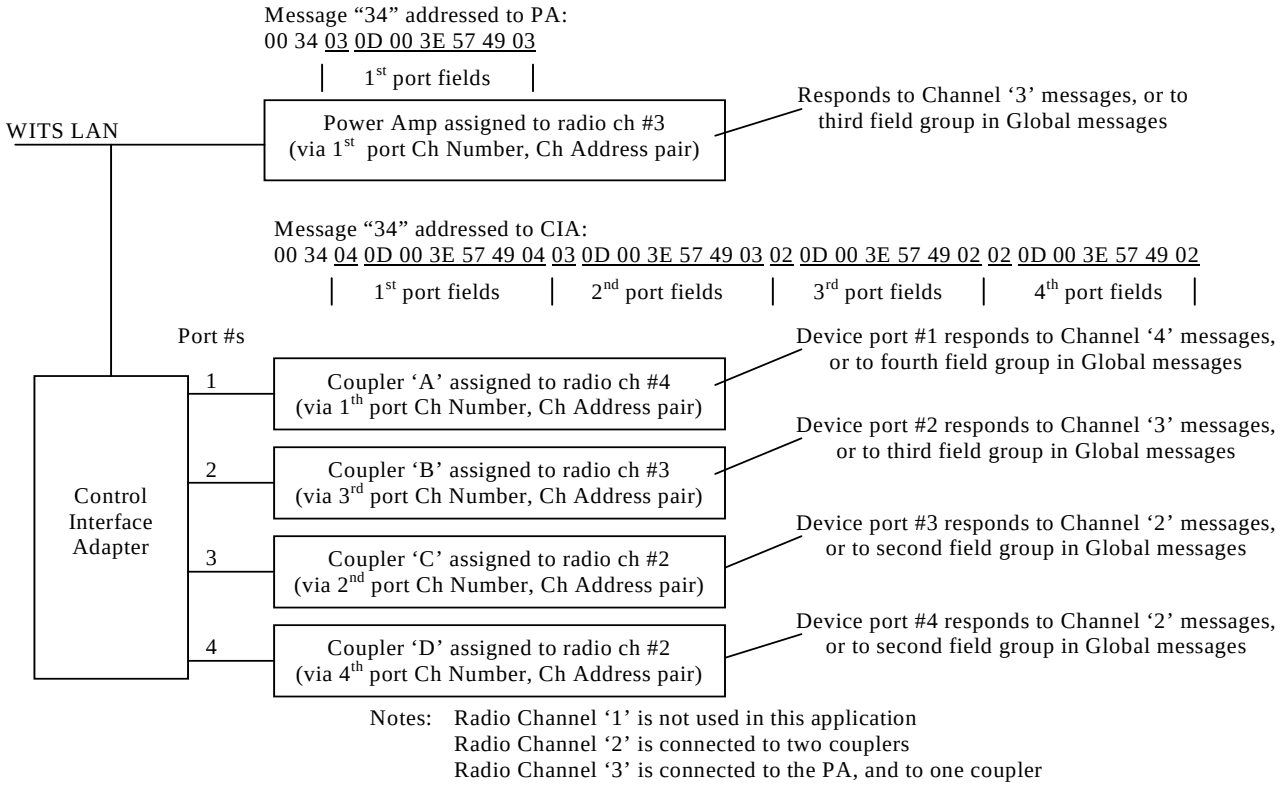

Figure 5 Radio Channel / Peripheral Port Mapping

4.47 Global Status Request (35H) Message

Destination Address Type: **Global Multicast** Message ID: **35H** Message Length: **6+**

The Global Status Request message commands all peripheral devices connected to the private Ethernet network to/not perform BIT, as determined by the state of applicable BIT Request control field, and report test results to the DMR network host. Each network device responds to the request message by transmitting a Status Response message (i.e.: Power amps – ID 37, Legacy controller (Signal Data Converter) – ID 3A). The response message may contain new or recent BIT status data. All network devices are assigned to a DMR radio channel. Multiple channel devices, such as Legacy controllers (Signal Data Converter), report the status for each applicable (attached) channel device, but not its own status. The Global Status Request message length is determined by the number radio channels defined in each specific DMR installation, with all radio channels having a BIT Request control field. The message length field accounts for all radio channels.

0	1	2	3	4	5	Nn+1
Message Priority	Message ID	Channel 1 BIT Request (5.2.4)	Channel 2 BIT Request (5.2.4)	Channel 3 BIT Request (5.2.4)	Channel 4 BIT Request (5.2.4)	Channel n BIT Request (5.2.4)

4.48 Device Status Request (36H) Message

Destination Address Type: **Device** Message ID: **36H** Message Length: **4**

The Device Status Request commands a single network device to/not perform BIT, as determined by the state of the BIT Request control field, and report test results to the DMR network host. The addressed device responds to the request message by transmitting a Status Response message (i.e.: power amplifiers – ID 37, legacy controllers (Signal Data Converter) – ID 3A). The response message may contain new or recent BIT status data. Multiple channel devices, such as legacy controllers (Signal Data Converter), report own status, but not the status of any of its attached channel devices.

0	1	2	3
Message Priority	Message ID	Reserved	BIT Request (5.2.4)

4.49 Status Response – Power Amplifier (37H) Message

Destination Address Type: **Device (to bus Master)** Message ID: **37H** Message Length: **41**

The Status Response – Power Amplifier message is transmitted to the DMR bus master upon receipt of a Global or Device Status Request message. The response message reports the most recent status information. The Power In, Power Out, and Power Reflected data fields report measured data. The VSWR data field reports the calculated variable portion of the VSWR ratio, such as ‘2’ in “2:1”. The VSWR ratio reference “:1” is omitted from the data field, and is to be supplied by the radio during VSWR calculations. The Max Power field reports the current value of the PA maximum power limiter, which can only altered through the front panel operator menu. The message contains two High input power indicators, one for the TX path, one for the RX path.

Release Notes:

Field	**DMR Release**	**Application**	**Summary**
Special Test	6.4.0.2	500W PA	Reports loopback status
High Input Power (RX)	6.3.6, 6.4.0.2	500W PA	Reports power of RX path
High Input Power (TX)	6.3.1.1	All power amplifiers	Appended “TX” to field title to accommodate new High Input Power (RX) field
Operator Lockout	6.3.1.1, 6.3.6, 6.4.0.2	100W, 200W, 500W, 100W-A, 200W-A PAs	Reports commanded state of local lockout command

Special notes regarding Talla-Com power amplifiers

1. The ver 3.0.0 PA ALWAYS reports BIT LRU Number as 'multiple'
2. The ver 3.0.0 PA reports fields 0 through 27 only
3. The ver 3.0.0 PA appends query message data after field 27 of every 12th status response message

0 Message Priority	1 Message ID	2 Device Type – Network (5.3.11)	3 BIT Status (5.2.5)	4 BIT LRU Number (5.2.3)	5 Channel Number (5.3.3)	6 – 7 Frequency/ Channel/ Band Set (5.3.16)	8 Power In sign, program (5.3.38)
9 Power Out unsigned, program (5.3.39)	10 Power Reflected unsigned, program (5.3.39)	11 VSWR unsigned program (5.3.39)	12 Gain Set sign 1 dB (5.3.37)	13 Waveform Power Ratio (5.3.56)	14 Temperature (5.3.48)	15 Fault Class (5.3.13)	16 ALC ON/OFF (5.2.1)
17 Blocking Mode (5.2.6)	18 Mute State (5.2.13)	19 Extended Message (5.2.9)	20 Power Resolution (5.3.33)	21 Transmitter State (5.2.22)	22 Warn – Low Output Power (5.2.16)	23 Fault – High Temp (5.2.15)	24 Fault – Power Supply #1 (5.2.15)
25 Fault – VSWR (5.2.15)	26 SysCal Status (5.3.45)	27 SysCal Offset (5.3.44)	28 Duplex Mode (5.2.8)	29 Control Mode (5.3.6)	30 Command Input Power sign 0.5 dB (5.3.36)	31 Command Output Power sign 1 dB (5.3.37)	32 Max Power sign 1 dB (5.3.37)
33 Warn – High Input Power, TX (5.2.16)	34 Warn – High Output Power (5.2.16)	35 Fault – Power Supply #2 (5.2.15)	36 Special Test (5.2.21)	37 ALC Slew Rate (5.3.1)	38 Reserved	39 Operator Lockout (5.2.11)	40 Warn – High Input Power, RX (5.2.16)

4.50 Status Response – RFD Controller (38H) Message

Destination Address Type: **Device (to bus Master)** Message ID: **38H** Message Length: **18**

The Status Response (RFD Controller) message is transmitted to the DMR bus master upon receipt of a Global or Device Status Request message. The response message reports the most recent status information: Device Type, BIT Status, Channel RFD Path, Fault Class, and Blocking Mode. Channel mapping is configured by the Device Channel Assignment message (paragraph 4.46).

0 Message Priority	1 Message ID	2 Device Type – Network (5.3.11)	3 - 4 BIT Status (5.2.5)	5 Channel 1 RFD Path (5.3.41)	6 Channel 2 RFD Path (5.3.41)	7 Channel 3 RFD Path (5.3.41)
8 Channel 4 RFD Path (5.3.41)	9 - 14 Reserved	15 Fault Class (5.3.13)	16 Reserved	17 Blocking Mode (5.2.6)		

4.51 Status Response – Tuners (39H) Message

Destination Address Type: **Device (to bus Master)** Message ID: **39H** Message Length: **16**

The Status Response (Tuners) message is transmitted to the DMR bus master upon receipt of a Global or Device Status Request message. The response message reports the most recent status information: Device Type, BIT Status, and Fault Class.

0 Message Priority	1 Message ID	2 Device Type – Network (5.3.11)	3 - 4 BIT Status (5.2.5)	5 - 14 Reserved	15 Fault Class (5.3.13)

4.52 Status Response – Legacy Controller (3AH) Message

Destination Address Type: **Device (to bus Master)** Message ID: **3AH** Message Length: **66**

The Status Response – Legacy Controller (Signal Data Converter) message is transmitted to the DMR bus master upon receipt of a Global or Device Status Request message. The response message reports the most recent status information. The Packet Count – Received and Packet Count – Valid field values are reset (after) each time this message is transmitted to the radio. Channel mapping is configured by the Device Channel Assignment message (paragraph 4.46). The Frequency Parameters fields are the same structures used in the Frequency Set message (paragraph 4.4.1) except the Effectivity Command field is always set to ‘0’. This allows detailed monitoring of actual tuned frequencies.

Release Note: Fields 50 through 65 were first implemented in SDC version 5.1.9

0 Message Priority	1 Message ID	2 Device Type – Legacy (5.3.10)	3 (self) BIT Status (5.2.5)	4 Channel 1 BIT Status (5.2.5)	5 Channel 2 BIT Status (5.2.5)	6 Channel 3 BIT Status (5.2.5)	7 Channel 4 BIT Status (5.2.5)
8 Channel 1 Transmit Status (5.2.22)	9 Channel 2 Transmit Status (5.2.22)	10 Channel 3 Transmit Status (5.2.22)	11 Channel 4 Transmit Status (5.2.22)	12 (self) Fault Class (5.3.13)	13 Channel 1 Fault Class (5.3.13)	14 Channel 2 Fault Class (5.3.13)	15 Channel 3 Fault Class (5.3.13)
16 Channel 4 Fault Class (5.3.13)	17 Channel 1 Ready (5.2.7)	18 Channel 2 Ready (5.2.7)	19 Channel 3 Ready (5.2.7)	20 Channel 4 Ready (5.2.7)	21 Available I/O (5.3.2)	22 - 23 Packet Count – Received (5.3.31)	24 – 25 Packet Count - Valid (5.3.31)
26 – 31 Channel 1 Frequency Parameters (4.4.1)		32 – 37 Channel 2 Frequency Parameters (4.4.1)		38 – 43 Channel 3 Frequency Parameters (4.4.1)		44 – 49 Channel 4 Frequency Parameters (4.4.1)	
50 Channel 1 Tune Error (5.2.23)	51 Channel 2 Tune Error (5.2.23)	52 Channel 3 Tune Error (5.2.23)	53 Channel 4 Tune Error (5.2.23)	54 Channel 1 Control Mode (5.2.24)	55 Channel 2 Control Mode (5.2.24)	56 Channel 3 Control Mode (5.2.24)	57 Channel 4 Control Mode (5.2.24)
58 Channel 1 Connect Status (5.2.25)	59 Channel 2 Connect Status (5.2.25)	60 Channel 3 Connect Status (5.2.25)	61 Channel 4 Connect Status (5.2.25)	62 Channel 1 Filter Fault Code (5.3.57)	63 Channel 2 Filter Fault Code (5.3.57)	64 Channel 3 Filter Fault Code (5.3.57)	65 Channel 4 Filter Fault Code (5.3.57)

4.53 Status Response – Interference Canceller (3BH) Message

Destination Address Type: **Device (to bus Master)** Message ID: **3BH** Message Length: **58+**

The Status Response – Interference Canceller (IC) message is transmitted to the DMR bus master upon receipt of a Global or Device Status Request message. The response message reports the most recent status information for the IC and each of its channels. Message length is determined by the number of radio channels defined for the specific the DMR installation, with each channel having a status structure. The length field accounts for all radio channels. Status data is contained in the Channel 'x' Status structures (paragraph 4.53.1). Channel mapping is configured by the Device Channel Assignment message (paragraph 4.46).

0 Message Priority	1 Message ID	2 Device Type – Network (5.3.11)	3 BIT Status (overall) (5.2.5)	4 Fault Class (overall) (5.3.13)	5 Mute State (5.2.13)	6 - 7 Packet Count – Received (5.3.31)
8 - 9 Packet Count - Valid (5.3.31)		10 - 21 Channel 1 Status (4.53.1)	22 - 33 Channel 2 Status (4.53.1)	34 - 45 Channel 3 Status (4.53.1)	46 - 57 Channel 4 Status (4.53.1)	n*12-2 – n*12+9 Channel n Status (4.53.1)

4.53.1 Interference Canceller Channel Status Structure

The twelve-byte Channel Status structure contains the following parameters: BIT Status, Fault Class, Bandwidth and most recent Tuned Frequency. Frequency values are represented by two fields: Resolution and Base. The structure is repeated for each Canceller channel.

s BIT Status (5.2.5)	s+1 Fault Class (5.3.13)	s+2 Bandwidth Resolution (5.3.19)	s+3 - s+6 Bandwidth Base (5.3.15)	s+7 Tuned Frequency Resolution (5.3.19)	s+8 - s+11 Tuned Frequency Base (5.3.15)

4.54 ASCII Command (3CH) Message

Destination Address Type: **Device** Message ID: **3CH** Message Length: **3 – 1499**

The ASCII Command message configures network devices that communicate with the radio through ASCII formatted messages. Message contents are reserved for system growth.

0 Message Priority	1 Message ID	2 - 1499 COTS Command String (5.1.1)

4.55 ASCII Response (3DH) Message

Destination Address Type: **Device (to bus Master)** Message ID: **3DH** Message Length: **3 – 1499**

The ASCII Response message is transmitted to the DMR bus master upon receipt of a Device ASCII Command message. The message contains ASCII formatted data in the COTS Response String field.

0 Message Priority	1 Message ID	2 - 1499 COTS Response String (5.1.2)

4.56 Fault Response (3EH) Message

Destination Address Type: **Device (to bus Master)** Message ID: **3EH** Message Length: **50**

The Fault Response message is transmitted to the DMR bus master when the device is configured for PEER FAULT talk mode operation and an internal fault has been detected. The message contains Channel Number, Fault Class, Error Code, and Fault Description fields.

0	1	2	3	4	5 - 6	7 - 49
Message Priority	Message ID	Channel Number (5.3.3)	Fault Class (5.3.13)	Error Code (5.3.14)	Reserved	Fault Description (5.1.4)

4.57 Talk Mode Set (3FH) Message

Destination Address Type: **Device** Message ID: **3FH** Message Length: **3**

The Talk Mode Set message configures the addressed device talk mode operation according to the value of the parameter contained in the Talk Mode field.

0	1	2
Message Priority	Message ID	Talk Mode (5.3.46)

4.58 Command Error (40H) Message

Destination Address Type: **Device (to bus Master)** Message ID: **40H** Message Length: **4**

The Command Error message is transmitted to the DMR bus master when the device is configured for PEER FAULT talk mode, and an error has been detected in a command message received from the bus master. The message contains Command Error Code, and Message ID (of faulted message) fields.

0	1	2	3
Message Priority	Message ID	Command Error Code (5.3.4)	Message ID (Table 3)

4.59 Echo Request (41H) Message

Destination Address Type: **Device** Message ID: **41H** Message Length: **2**

The Echo Request message commands the addressed device to transmit a Device Echo Response message. The command/response message sequence provides bus timing information to the bus master.

0	1
Message Priority	Message ID

4.60 Echo Response (42H) Message

Destination Address Type: **Device (to bus Master)** Message ID: **42H** Message Length: **2**

The Echo Response message is transmitted to the DMR bus master upon receipt of a Device Echo Request message. The message is transmitted within 100 µS +/- 80nS after receipt of the last bit of the request message. The command/ response message sequence provides bus timing information to the bus master.

0 Message Priority	1 Message ID

4.61 Local Lockout (43H) Message

Destination Address Type: **Device** Message ID: **43H** Message Length: **3**

The Local Lockout message configures operator access to (front panel) controls of the addressed device according to the state of the Local Lockout field. The network device always responds to Ethernet command messages, regardless of the state of the Local Lockout field.

0 Message Priority	1 Message ID	2 Local Lockout (5.2.11)

4.62 Discrete Hardwire Option (44H) Message

Destination Address Type: **Device** Message ID: **44H** Message Length: **8**

The Discrete Hardwire Option message configures network device discrete controls (Transmit/ Receive, Transmit Key, Strobe) to operate from Ethernet messages or discrete (hardwire) inputs according to the state of the Input Select control fields. Each signal can be individually configured for Ethernet message or discrete input control. The signals represent the five high-speed discrete outputs (including spares) from the radio's waveform. The Input Select fields: Transmit/Receive, Transmit Key, Strobe, and Spare map to Discrete Control message fields: Duplex, Transmit Key, Frequency Strobe, and Spare.

0 Message Priority	1 Message ID	2 Input Select – Transmit/Receive (5.3.24)	3 Input Select – Transmit Key (5.3.24)	4 Input Select – Strobe (5.3.24)	5 Input Select – Spare #1 (5.3.24)	6 Input Select – Spare #2 (5.3.24)
7 Slow Command Priority (3.1.6.1)						

4.63 Waveform Mode (45H) Message

Destination Address Type: **Device** Message ID: **45H** Message Length: **3**

The Waveform Mode message configures the addressed device to support operation of the active DMR waveform, according to the state of the Waveform Mode field. The addressed device must be capable of working with multiple waveforms.

0 Message Priority	1 Message ID	2 Waveform Mode (5.3.55)

4.64 Discrete Delays (46H) Message

Destination Address Type: **Device (Channel Multicast)** Message ID: **46H** Message Length: **12**

The Discrete Delays message configures the addressed device to delay response to changes of T/R, Xmit Key, and Hop Strobe states by the time period contained in the Time Delay fields. Each control can be set to different delay periods. The delay applies to state changes received from Ethernet messages or through the external discrete control inputs.

0 Message Priority	1 Message ID	2 - 3 Transmit/ Receive Delay (Delay Count – Long) (5.3.7)	4 - 5 Xmit Key Delay (Delay Count – Long) (5.3.7)	6 - 7 Hop Strobe Delay (Delay Count – Long) (5.3.7)
			8 - 9 Spare #1 Delay (Delay Count – Long) (5.3.7)	10 - 11 Spare #2 Delay (Delay Count – Long) (5.3.7)

4.65 Legacy Controller I/O Configuration (47H) Message

Destination Address Type: **Device** Message ID: **47H** Message Length: **10+**

The Legacy Controller (Signal Data Converter) I/O Configuration message configures the addressed device I/O hardware drivers according to the parameters contained in the eight-byte I/O Configuration structures (paragraph 4.65.1). Message length is determined by the number of structures contained in the message, one to a maximum of 187. The Legacy Controller (Signal Data Converter) configures I/O with parameters from the most recent parameters. This means that I/O configurations are overwritten when multiple Configuration structures have the same I/O Number field value.

0 Message Priority	1 Message ID	2 - 9 I/O #1 Configuration (4.65.1)	n*8-6 – n*8+1 I/O #n Configuration (4.65.1)

4.65.1 I/O 'X' Configuration Structure

The I/O Configuration structure contains the operating parameters for a single Legacy Controller (Signal Data Converter) I/O driver. The parameters describe the I/O number, I/O type, and applicable maximum and minimum output voltage limits, maximum output drive current limit, and input voltage threshold. The I/O Number field specifies the driver, as mapped in the applicable peripheral device ICD.

s+0	s+1	s+2	s+3	s+4	s+5	s+6	s+7
I/O Number (5.3.22)	I/O Type (5.3.23)	Maximum Output Voltage - (5.3.30)	Minimum Output Voltage - (5.3.30)	Maximum Output Current - (5.3.29)	Output Reserved	Input Voltage Threshold (5.3.25)	Input Reserved

4.66 Legacy Controller Output Command (48H) Message

Destination Address Type: **Device** Message ID: **48H** Message Length: **4+**

The Legacy Controller (Signal Data Converter) Output Command message sets the state of a series of I/O drivers, previously configured as outputs by the Legacy Controller I/O Configuration message (paragraph 4.65). The message contains at least one structure (paragraph 4.66.1), that identifies the output to be set, and the logic state for the output. Message length (paragraph 3.1.5) is determined by the number of I/O Output Control structures contained in the message. I/O outputs are mapped in the applicable peripheral device ICD.

0	1	2 - 3	n*2 – n*2+1
Message Priority	Message ID	I/O #1 Output Control (4.66.1)	I/O #n Output Control (4.66.1)

4.66.1 I/O Output 'X' State Structure

The I/O Output State structure contains two fields: I/O Number, and I/O Output State. The I/O Number field points to an I/O driver configured as an output. I/O outputs are mapped in to the applicable peripheral device ICD. The output is set to the logic level contained in the I/O Output State field.

s+0	s+1
I/O Number (5.3.22)	I/O Output State (5.3.21)

4.67 Legacy Controller I/O Read Request (49H) Message

Destination Address Type: **Device** Message ID: **49H** Message Length: **2**

The Legacy Controller (Signal Data Converter) I/O Read Request message commands the Legacy Controller to sample and report the current state of all I/O. Input data is returned to the radio in a Legacy Controller I/O Read Response message (paragraph 4.68).

0	1
Message Priority	Message ID

4.68 Legacy Controller I/O Read Response (4AH) Message

Destination Address Type: **Device** Message ID: **4AH** Message Length: **4+**

The Legacy Controller (Signal Data Converter) I/O Read Response message reports the current state of the I/O drivers. The message is generated upon receipt of a Legacy Controller I/O Read Request message (paragraph 4.67). Message length (paragraph 3.1.5) is determined by the number of I/O State fields contained in the message. Each field reports the state (value) of one I/O driver, in consecutive order, according to the applicable peripheral device ICD.

0 Message Priority	1 Message ID	2 Total I/O Number (5.3.22)	3 I/O #1 Data (5.3.21)	n+2 I/O #n Data (5.3.21)

4.69 Waveform Parameters Set (4BH) Message

Destination Address Type: **Device** Message ID: **4BH** Message Length: **3 – 1499**

The Waveform Parameters Set Message configures a peripheral device with specific parameters, allowing the device to work properly with the active waveform.

0 Message Priority	1 Message ID	2 - 1499 Waveform Parameters (5.3.54)

4.70 Global Time Sync (50H) Message

Destination Address Type: **Global Multicast** Message ID: **50H** Message Length: **8**

The Global Time Sync message sets the internal clocks of all network devices to the time contained in the value fields. For multi-channel Legacy Controllers (Signal Data Converter), the delay time applies to the response time of all attached devices (channels).

0 Message Priority	1 Message ID	2 Hours Value (Time – Hour) (5.3.50)	3 Minutes Value (Time – Minute) (5.3.51)	4 - 5 Millisec Value (Time – Decimal) (5.3.49)	6 – 7 µsec Value (Time – Decimal) (5.3.49)

4.71 Device Time Sync (51H) Message

Destination Address Type: **Device** Message ID: **51H** Message Length: **10**

The Device Time Sync message sets the internal clock of the addressed network device to the time contained in the value fields. The Loopback Delay field configures Echo response transmission delay period. For multi-channel Legacy Controllers (Signal Data Converter), the delay time applies to the response time of all attached devices (channels). The Loopback delay applies only to the Legacy Controller.

0 Message Priority	1 Message ID	2 Hours Value (Time – Hour) (5.3.50)	3 Minutes Value (Time – Minute) (5.3.51)	4 - 5 Millisec Value (Time – Decimal) (5.3.49)
6 - 7 µsec Value (Time – Decimal) (5.3.49)		8 - 9 Loopback Delay (Delay Count – Long) (5.3.7)		

4.72 Global Power Increment (60H) Message

Destination Address Type: **Global Multicast** Message ID: **60H** Message Length: **6+**

The Global Power Increment message sets the amplifier output level of all applicable network devices to the value contained in the RF Step Value fields. For multi-channel Legacy Controllers (Signal Data Converter), the delay time applies to the response time of all attached devices (channels). Message length is determined by the number of DMR Radio channels used by the application, with a Step Value field for each channel. Channel mapping of attached legacy components is contained in Legacy Controller (Signal Data Converter) specification documents.

0 Message Priority	1 Message ID	2 Channel 1 RF Step Value (5.3.40)	3 Channel 2 RF Step Value (5.3.40)	4 Channel 3 RF Step Value (5.3.40)	5 Channel 4 RF Step Value (5.3.40)	n+1 Channel n RF Step Value (5.3.40)

4.73 Device Power Increment (61H) Message

Destination Address Type: **Device (Channel Multicast)** Message ID: **61H** Message Length: **3**

The Device Power Increment message sets the amplifier output level of a single network device to the value contained in the RF Step Value field.

0 Message Priority	1 Message ID	2 RF Step Value (5.3.40)

4.74 RF Level Set Message (ID 62H)

Destination Address Type: **Device** Message ID: **62H** Message Length: **3**

The RF Level Set message reports an estimated RF power value to peripheral devices. The value is waveform-generated, and represents the ITU output, adjusted for cable loss, that may be expected at the peripheral device's RF input. Talla-Com power amplifiers retain this value as INP PWR during power cycles.

0	1	2
Message Priority	Message ID	ITU Output Power sign, 0.5 dB (5.3.36)

4.75 Power Resolution Set Message (ID 63H)

Destination Address Type: **Device** Message ID: **63H** Message Length: **3**

The Power Resolution Set message configures amplifier Status Response message RF power fields to report data according to the tabled value contained in the Power Resolution field (paragraph 5.3.33). The PA defaults to reporting RF power with 1 dBm resolution at power-up. The resolution parameter is not retained when power is removed from the PA.

0	1	2
Message Priority	Message ID	Power Resolution (5.3.33)

4.76 Global Combo Frequency Set (A0H) Message

Destination Address Type: **Global Multicast** Message ID: **A0H** Message Length: **3 – 1499**

The Global Combo Frequency Set message controls RFD systems when multiple Radio Channels (sub-channels) are being transmitted on a single DMR channel. Message contents are reserved for system growth.

0	1	2 - 1499
Message Priority	Message ID	Reserved

4.77 Channel Combo Frequency Set (A1H) Message

Destination Address Type: **Channel Multicast** Message ID: **A1H** Message Length: **3 – 1499**

The Channel Combo Frequency Set message controls RFD systems when multiple Radio Channels (sub-channels) are being transmitted on a single DMR channel. Message contents are reserved for system growth.

0	1	2 - 1499
Message Priority	Message ID	Reserved

4.78 Software Download Status (FEH) Message

Destination Address Type: **Device** Message ID: **FEH** Message Length: **8 – 1499**

The Software Download Status message is transmitted to the DMR network host upon receipt of a Software Download message. The Packet Status field reports the reception/processing status of the most recently received data packet. The Packet Count field contains the value (ID) of the next packet to be (re)transmitted to the peripheral. The Inter-Packet Delay field contains the number of milli-seconds the DMR Controller is to wait between the transmission of packets. The DMR Controller has a default delay value of zero milli-seconds. The Vender Download Status field contains ASCII text that describes the status of the download process.

0	1	2 - 3	4	5	6	7 - 1499
Message Priority	Message ID	Packet Count (5.3.31)	Packet Status (5.3.32)	Inter-Packet Delay – short (5.3.8)	Reserved	Vender Download Status (5.3.53)

4.79 Software Download (FFH) Message

Destination Address Type: **Device** Message ID: **FFH** Message Length: **9 – 1499**

The Software Download message downloads a single addressed network device with vendor-supplied program data. The Packet Count starts at zero and increases by one with each record (message). The Maximum packet count field contains the total number of packets contained in the download. Vendor Download Data field content is supplied by equipment vendors. Vendor-specific notes of 'Vendor Download' field contents are contained in applicable external RF component Ethernet message ICDs. The DMR controller outputs the messages, but does not perform any checks on Download field data.

0	1	2 - 3	4 - 5	6	7	8 - 1499
Message Priority	Message ID	Packet Count (5.3.31)	Packet Count – Max (5.3.31)	Download Type (5.3.12)	Reserved	Vendor Download (5.3.52)

5 Message Element Descriptions

This section details message data elements. The Elements may be used in multiple messages.

5.1 ASCII Field Descriptions

ASCII fields contain strings of printable characters. ASCII strings are visible in the radio operator interface.

5.1.1 COTS Command String ASCII Field

The COTS Command String ASCII field contains an ASCII format message that configures and controls COTS network devices. ASCII messages are supplied by the COTS device manufacturer. The Command String field is padded to short or long message capacity with HEX value 0x00 (ASCII NUL code).

5.1.2 COTS Response String ASCII Field

The COTS Response String ASCII field contains an ASCII format message that replies to a previously received COTS Command String message. The COTS device manufacturer supplies all ASCII string information. The Command String field is padded to short or long capacity with HEX value 0x00 (ASCII NUL code).

5.1.3 Component Title ASCII Field

The 24-byte Component Title ASCII field contains a text (string) title of the network device. The Component title string is left-justified, appended with space (0x20) characters to fill the field.

5.1.4 Fault Description ASCII Field

The 39-byte Fault Description ASCII field contains an ASCII string that describes fault conditions detected by a peripheral device. The field is padded to capacity with HEX value 0x00 (ASCII NUL code).

5.1.5 Fiber Optic Capability ASCII Field

The single-byte Fiber Optic Capability ASCII field contains one of two character values: ‘Y’ (fiber optic capable), or ‘N’ (not fiber optic capable).

5.1.6 Legacy Control String ASCII Field

The 16-byte Legacy Control String ASCII field reports the type translator is loaded into the Legacy Controller (Signal Data Converter). As of DMR Build 6.3.1.1, the Legacy Controller supports two translator types: TD-1456, and OA-9277A. The legacy control string is left-justified, appended with space (0x20) characters to fill the field.

5.1.7 Part Number ASCII Field

The Part Number ASCII field contains a text (string) of the network device part number. Power Amplifiers report an eight-byte Part Number. The Legacy Controller (Signal Data Converter) reports a ten-byte Part Number. The part number string is left-justified, appended with space (0x20) characters to fill the field.

5.1.8 Serial Number ASCII Field

The eight-byte Serial Number ASCII field contains a text character representation of the serial number assigned to each External RF peripheral device. Field data is left justified, with trailing pad bytes (HEX value 0x00). The serial number field may contain any combination of printable ASCII characters in the HEX range 0x20 (space character) through 0x7E (tilde character).

5.1.9 Test Status ASCII Field

The four-byte Test Status ASCII field contains one of two text values: PASS or FAIL

5.1.10 Text Label ASCII Field

The 16-byte Text Label ASCII field contains a text (string) descriptive label for the item located in the subsequent text field. The Text Label string is left-justified, appended with space (0x20) characters to fill the field.

5.1.11 Version ID ASCII Field

The Version ID ASCII field contains a text (string) representation of the applicable hardware or software version. The Power Amplifiers report version information as an eight-byte field. The Legacy Controller (Signal Data Converter) reports version hardware and software as a 16-byte field, and FPGA version as an eight-byte field. Version ID string is left-justified, appended with space (0x20) characters to fill the field. All version IDs are formatted as MM-FF-RR, where:

MM = major release, indicates hardware/software link, or not back-compatible with previous version
FF = functional release, new feature, compatible with previous versions of hardware and/or software
RR = defect repair

5.2 Logic Field Descriptions

Logic fields typically have two states: (HEX) 0x00, and (HEX) 0xFF. Value 0x00 usually indicates an “OFF” or non-asserted state. Value 0xFF usually indicates an “ON” or asserted state.

5.2.1 Automatic Level Control (ALC) Logic Field

The single-byte Automatic Level Control (ALC) logic field configures operation of peripheral ALC functions. A value of 0xFF sets ALC operation to ON, also known as “track”. A field value of 0x00 sets ALC operation to OFF, also known as “hold”. Peripheral (PA) gain controls are allowed to “track” (change) while ALC is ON. PA gain controls hold the most recent “track” values when ALC is switched to OFF. PA output power may drift, within specified PA tolerances, while ALC is OFF.

5.2.2 Reserved

5.2.3 BIT LRU Number Logic Field

The single-byte BIT LRU Number logic field reports the single/multiple LRU (line-replaceable-unit) status of the originating peripheral. The field is set to 0x00 when the peripheral is serviced/replaced as a single LRU. The field is set to 0xFF when the peripheral contains multiple components, which can be replaced or serviced in the field.

5.2.4 BIT Request Logic Field

The single-byte BIT Request logic field controls channel/device BIT operation. A field value of 0x00 commands the addressed device to report its most recent collected status, but not to perform BIT. A field value of 0xFF commands the device to perform BIT, generate, and transmit a status message containing the test results.

5.2.5 BIT Status Logic Field

The single-byte BIT Status logic field reports the overall results of the most recent status check. The field contains a value of 0x00 when no faults are currently reported, and a 0xFF when a fault condition exists. When a single-LRU device, the BIT Status field value represents the entire unit. When the device consists of multiple field-replaceable / serviceable components, the BIT Status field reports the state of the worst condition component.

5.2.6 Blocking Mode Logic Field

The single-byte Blocking Mode logic field controls peripheral Blocking Mode operation. A field value of 0xFF sets the mode to BLOCKING. A value of 0x00 sets the mode to NON-BLOCKING.

5.2.7 Device Ready Logic Field

The single-byte Device Ready logic field reports the peripheral device readiness state, such as while tuning frequencies. The field contains value 0x00 when the device is ready to accept a new command, and value 0xFF when the device is busy performing the most recent (Ethernet) commanded task.

5.2.8 Duplex Mode Logic Field

The single-byte Duplex Mode logic field reports the power amplifier's duplex configuration (FULL, HALF). The field contains value 0x00 when FULL duplex, and value 0xFF when HALF duplex. Duplex mode is configured by the Discrete Control messages (paragraph 4.1.1).

5.2.9 Extended Message Logic Field

The single-byte Extended Message logic field was created to allow radio RF control software to remain compatible with early version (pre 1.3) Talla-Com VHF/UHF power amplifiers. The indicator is located in byte-location 19 of the Status Response – Power Amplifier message (paragraph 4.49). A value 0xFF indicates the Status Response message contains data beyond byte-location 19. All other field values indicate message contents are valid only through byte-location 18. The Extended Message logic field is now set to 0xFF (data in bytes beyond location 19) for all power amplifier applications.

5.2.10 Frequency Strobe Logic Field

The single-byte Frequency Strobe data field commands peripheral devices to "latch" (and tune to) the frequency contained in the most recent received Frequency Set message (paragraph 4.4.1) when the field transitions from a 0x00 value to a 0xFF value. The peripheral performs no action while the field value is static at 0x00 or 0xFF, or transitions from 0xFF to 0x00.

5.2.11 Local Lockout Logic Field

The single-byte Local Lockout logic field configures (local) operator access to (front panel) control inputs. A field value of 0x00 enables the use of operator panel controls. A field value of 0xFF disables the use of all operator panel controls. Ethernet port control is always enabled, regardless of the state of this switch

5.2.12 Mute Enable Logic Field

The single-byte Mute Enable logic field controls peripheral muting operation. A field value of 0x00 sets the muting control to the PERMIT (OFF/INACTIVE) state. A field value of 0xFF sets the muting control to the DENY (ON/ACTIVE) state. The transmission of RF energy is inhibited while Mute is set to DENY, regardless of the state of the transmit key.

5.2.13 Mute State Logic Field

The single-byte Mute State logic field reports the current state of the Muting operation. A field value of 0x00 indicates that Mute is set to the OFF/INACTIVE state. A field value of 0xFF indicates Mute is set to the ON/ACTIVE state. Transmission RF energy is inhibited while Mute is enabled, regardless of the state of the transmit key.

5.2.14 Reserved

5.2.15 PA Alert – Fault Logic Field

The single-byte PA Alert – Fault logic field reports detected events that may inhibit operation of the transmit path. The PA output may be set to keyOFF state when a "Fault" event has occurred. The detected event may also appear on the PA operator menu as an event notice such as "TEMP FAULT". The alert field contains value 0x00 when no event condition is present, and value 0xFF when a fault event has been detected. Fault alert thresholds are described in applicable power amplifier ICDs. Devices with single power supply report status as power supply #1 – the number may be omitted for these units. The following list summarizes reported PA Alert – Fault events:

Status Field	Description
Fault – High Temp	Internal temperature too high
Fault – Power Supply #1	Power supply #1 output too low
Fault – Power Supply #2	Power supply #2 output too low
Fault – VSWR	VSWR excessive at transmitter output

5.2.16 PA Alert – Warning Logic Field

The single-byte PA Alert – Warning logic field reports detected out-of-tolerance conditions. The PA output power may be reduced, but not inhibited – set to keyOFF state – when a "Warning" condition has been detected. The detected condition may also appear on the PA operator menu as an event notice such as "High Input Power". The PA warning field contains value 0x00 when no out-of-tolerance condition is present, and value 0xFF when a tolerance (warning) condition has been detected. Warning thresholds are described in applicable power amplifier ICDs. The following list summarizes reported PA Alert – Warning events:

Status Field	Description
Warn – High Input Power	Measured input RF power too high, decreased output power
Warn – High Output Power	Measured output RF power too high, decreased or limited output power
Warn – Low Output Power	Transmitted power level lower than commanded, decreased output power

5.2.17 Receiver Bypass Logic Field

The single-byte Receiver Bypass logic field is reserved for system growth. A field value of 0x00 sets the Bypass mode to OFF/INACTIVE. A value of 0xFF sets Bypass mode operation to ON/ACTIVE.

5.2.18 Reset Logic Field

The single-byte Reset logic field commands peripheral devices to perform internal RESET operations. The field value of 0x00 allows the addressed device to continue normal operation. A field value of 0xFF commands the device to perform RESET operations.

5.2.19 Sleep Mode Logic Field

The single-byte Sleep Mode logic field controls peripheral device lowest-power operation. A field value of 0x00 sets Sleep Mode operation to OFF/INACTIVE. A field value of 0xFF sets SLEEP Mode to ON/ACTIVE. Sleep mode generally reduces device power consumption. Reception of an Ethernet command (addressed to the device) terminates Sleep mode operation, returning the device to normal operation.

5.2.20 Standby Mode Logic Field

The single-byte Standby Mode logic field controls low-power operation of peripheral devices. A field value of 0x00 sets Standby Mode operation to OFF/INACTIVE. A field value of 0xFF sets Standby Mode to ON/ACTIVE. Standby mode generally reduces device power consumption. Reception of an Ethernet command (addressed to the device) terminates Standby mode operation, returning the device to normal operation.

5.2.21 Test – Loop Back Logic Field

The single-byte Test – Loop Back logic field configures the peripheral to use unique built-in-test features such as RF signal loop-back. The special test feature is enabled when this field is set to a value of 0xFF, and disabled when set to 0x00.

5.2.22 Transmit Key Logic Field

The single-byte Transmit Key logic field controls the PA transmitter PTT (Push-to-Talk) switch. The PA transmitter (output) is enabled while the field value is a 0xFF, and is disabled (no output) while the field value is 0x00. While Duplex Mode (paragraph 5.2.8) is set to HALF: the PA operates as a receiver while PTT is 0x00 and operates as a transmitter while PTT is 0xFF. When used with the Legacy Controller (Signal Data Converter) status response message (paragraph 4.52), 0x00 indicates the coupler channel is set to transmit “OFF” state, and 0xFF indicates the coupler channel is set to transmit “ON” state.

5.2.23 Tune Error Logic Field

The single-byte Tune Error logic field indicates the results of a comparison between radio-commanded frequency and RF coupler filter reported frequency. The Tune Error field is set to 0x00 when the difference between the radio-commanded frequency and the filter-reported frequency is effectively ‘0’. The Tune Error field is set to 0xFF when an effective difference is detected between the radio-commanded frequency and the filter-reported frequency. RF filter-reported frequencies are effectively the same as radio-commanded frequencies when within +/- 5 KHz..

5.2.24 Device Control Mode Logic Field

The single-byte Device Control Mode logic field indicates the LOCAL/REMOTE control status of the external RF device. The Device Control Mode field is set to 0x00 when the network device is controlled by the radio, and is set to 0xFF when the network device is controlled through its operator panel. Important notes: The Device Control Mode logic field name is a known overloading of the Control Mode Data field name (paragraph 5.3.6). The Control Mode data field (paragraph 5.3.6) field lists the original (Talla-Com PA) modes. The legacy control modes are used by all power amplifiers in field 29 (Control Mode) of the PA status message (ID 37). The Signal Data Converter uses this logical version of Device Control Mode to report RF coupler LOCAL/REMOTE control status.

5.2.25 Device Connect Status Logic Field

The single-byte Device Connect Status logic field indicates the connection status of specific devices to the External RF control network. The Device Connect Status field is set to 0x00 when the device is connected to the network, and is set to 0xFF when the device is not detected. The Signal Data Converter uses this data field to report RF coupler filter connection status.

5.3 Data Field Descriptions

5.3.1 ALC Slew Rate

The single-byte ALC Slew Rate data field sets the operating mode for the peripheral's ALC function. The slew rates are defined in the following table. ALC Slew Rate is valid only when Automatic Level Control (paragraph 5.2.1) is enabled. Implementation details of ALC slew rates are contained in the RF peripheral Ethernet message ICDs.

Field Value (HEX)	ALC Slew Rate Descriptions
00	Stabilization rate not selected
01	"Slow" stabilization rate
02	"Fast" stabilization rate
03-FF	Reserved for future enhancements

5.3.2 Available I/O Data Field

The single-byte Available I/O data field reports the number of legacy controller (Signal Data Converter) programmable I/O signals available for use by the radio. The field value excludes I/O lines in use by the currently loaded translator. The field contains an unsigned value with a range of 0 – 255.

5.3.3 Channel Number Data Field

The single-byte Channel Number data field assigns a numeric DMR radio channel value to the addressed device. The field has contains an unsigned value with a range of 0 – 255. The value '0' represents an unused device, not assigned to a radio channel. For example, a multi-channel Legacy Controller (Signal Data Converter) device has radio channels assigned to each of its ports, but may not have a radio channel assigned to itself. Spare peripherals, such as power amplifiers, may be assigned to channel '0'

5.3.4 Command Error Code Data Field

The single-byte Command Error Code data field describes the fault detected during receipt of the most recent Ethernet message. The field always contains one of the values listed in the following table.

Field Value (HEX)	Command Error Code Descriptions
00	Not Used
01	Unrecognized Command
02	Field value out of range
03	Commanded mode not supported
04	Command conflicts with current configuration
05-FF	Reserved for future enhancements

5.3.5 Command Speed Type Data Field

The single-byte Command Speed Type data field describes the message rate the reporting device can accept. The field always contains one of the values listed in the following table. When the field value is non-zero, and the reporting device Talk mode is set to PEER, the device transmits a Command Compete message (ID 2FH) upon the completion of each commanded task (such as frequency change).

Field Value (HEX)	Command Speed Type Descriptions
00	Full speed on all commands
01	Slow on frequency hop commands
02-FF	Reserved for future enhancements

5.3.6 Control Mode Data Field

The single-byte Control Mode data field reports the power amplifier's discrete input configuration: LOCAL, or REMOTE. The legacy 100W, 200W, and non-ALC capable VHF/UHF power amplifiers also report a value for SATCOML control mode. SATCOML mode was created by the PA vendor, as an extension to LOCAL mode.

Field Value (HEX)	Control Mode	Command Mode Descriptions
00	LOCAL	duplex mode and transmitter controlled through discrete I/O
01	REMOTE	duplex mode and transmitter controlled through Ethernet
02	SATCOML	same as LOCAL control mode
03-FF	Reserved	Reserved for future enhancements

5.3.7 Delay Count – Long Data Field

The two-byte Long Delay Count data field contains the time value (in μsec) to delay a peripheral's commanded operation. The delay interval is nominal (± 1 μsec), and is referenced to the trailing edge of the last bit of the Ethernet message containing the delay value. The unsigned field has a range of 0 – 65535.

Byte n	byte n+1
Delay interval (MSB)	Delay interval (LSB)

5.3.8 Delay Count – Short Data Field

The single-byte Short Delay Count data field contains the time value (in μsec) to delay a peripheral's commanded operation. The delay interval is nominal (± 1 μsec), and is referenced to the trailing edge of the last bit of the received Ethernet command message. The unsigned field has a range of 0 – 255 μsec.

5.3.9 Device Address Data Field

The six-byte Device Address data field contains an External RF Ethernet MAC address, formatted as six HEX values. The field is left justified, with the Address type value (Global, Channel, Device) in the lowest-numbered byte location; i.e. 0D 00 3E 57 49 54 ordered from bytes n to n+5.

5.3.10 Device Type – Legacy Data Field

The single-byte Legacy Device Type data field identifies the various external peripherals connected to the legacy controller (Signal Data Converter). The Device Type field always contains one of the values listed in the following table.

Field Value (HEX)	Device Type (Legacy)	Description
00	None	Disables all translator operation
01	Antenna coupler	Generic antenna coupler
02	Filter	Generic RF filters
03	Matrix	Generic RF switch matrix
04	OA-9277A	OA-9277A coupler
05	TD-1456	TD-1456 multiplexer
06-FF	Reserved	Reserved for future enhancements

5.3.11 Device Type – Network Data Field

The single-byte Network Device Type data field identifies the various external peripherals connected to the private Ethernet bus. The Device Type field always contains one of the values listed in the following table. HF for DMR External RF use is 2 to 30 MHz, VHF/UHF is 30 to 400 MHz. Duplex indicates PA is capable of half or full duplex operation. (not) ALC capable indicates ALC capability. Release note: this field supported by all power amplifiers: 100W, 200W, and 100W-A (6.3.1.1), 500W (6.4.0.2), 200W-A (TBD).

Field Value (HEX)	Device Type (Network)
00	Not Used
01	100W VHF/UHF Power Amplifier – duplex, not ALC capable 100W-A VHF/UHF Power Amplifier – duplex, not ALC capable 100W-A VHF/UHF Power Amplifier – duplex, ALC capable 200W VHF/UHF Power Amplifier – duplex, not ALC capable 200W-A VHF/UHF Power Amplifier – duplex, ALC capable
02	RFD
03	Tuner
04	Legacy Controller (Signal Data Converter)
05	Interference Canceller – Receive Automatic Canceller Unit (RACU)
06	Interference Canceller – Transmit ‘Q’ Multiple Filter (TQMF)
07	LAN Controller (another radio)
08	Reserved
09	Reserved
0A	Reserved
0B	500W HF Power Amplifier – half duplex, ALC capable
0C-FF	Reserved

5.3.12 Download Type Data Field

The single-byte Download Type data field identifies the type packet contained in the current message. The field always contains one of the values listed in the following table.

Field Value (HEX)	Download Type
00	Application program
01	FPGA configuration
02	Boot/loader program
03	Auxiliary application program
04	Auxiliary boot/loader program
05-FF	Reserved

5.3.13 Fault Class Data Field

The single-byte Fault Class data field reports the intensity of faults detected by peripheral devices. The Fault Class field always contains one of the class values shown in the following table.

Value	Fault Class	Description
00	None	No fault detected
01	Minor error	Error does not affect device operation
02	Serious error	Device is usable, although some functions may not be working
03	Critical error	Device failed to complete requested action (over heating, part failure, etc.)
04-FF	Reserved	Reserved for system growth

5.3.14 Error Code Data Field

The single-byte Error Code data field reports the type fault detected by peripheral devices, in particular, the power amplifier. The Error Code field always contains one of the code values shown in the following table. The power amplifier status response message (paragraph) contains individual fields for each of the listed faults. The individual fields provide a means to report multiple faults, whereas the Error Code field is capable of reporting only a single event at any time. Devices with a single power supply use the code for Power Supply #1.

Value	Error	Description
00	None	No Error detected
01	Excessive VSWR	VSWR is excessive
02	Excessive Temperature	Temperature is outside operating range
03	Low Power Supply #1	Power supply #1 output is outside normal range
04	Low Power Supply #2	Power supply #2 output is outside normal range
05	Low Output RF Power	Transmitter RF output lower than expected
06	High Input RF Power	Input (to peripheral) RF higher than expected
07	High Output RF Power	Transmitter RF output higher than expected
08-FF	Reserved	Reserved for system growth

5.3.15 Frequency Base Data Field

The four-byte Frequency Base data field contains a (HEX) representation of the next base RF frequency. The integer number is multiplied by the Frequency Resolution data field value to determine the actual frequency. The Frequency Base data field has a range of 0 to 2^{32}-1 (0x00000001 to 0xFFFFFFFF).

Byte n Frequency (MSB)	byte n+1 Frequency	byte n+2 Frequency	byte n+3 Frequency (LSB)

5.3.16 Frequency/Channel/Band Set Data Field

The two-byte Frequency/Channel/Band Set data field reports a frequency value in the range of 0 – 65,535 MHz. A ‘0’ value in both bytes indicates the frequency value is not applicable to the device, or has not yet been set by the radio. Absolute frequency values less than 1 MHz are represented by a field value of ‘1’. All other absolute frequency values are rounded (up or down) to the nearest MHz.

Byte n Frequency (MSB)	byte n+1 Frequency (LSB)

5.3.17 Effectivity Command Data Field

The single-byte Effectivity Command data field contains the frequency operation to be performed by the peripheral device. The field always contains one of the values listed in the following table.

Value (HEX)	Command	Description
0	Frequency Change	Tune to the RF frequency contained in message
1	Frequency Store	Save (message) RF frequency for later use
2	Band Change	Tune to the RF frequency band contained in message
3	Band Store	Save (message) RF frequency band for later use
4	Channel Change	Tune to the RF channel number contained in message
5	Channel Store	Save (message) RF channel number for later use
6 - FF	Reserved	Reserved for system growth

5.3.18 Frequency Limit (LOW, HIGH) Data Field

The two-byte Frequency Limit (LOW, HIGH) data field contains an absolute (HEX format) RF frequency. The field has a range of 0 – 2^{16} MHz (0x0000 to 0xFFFF).

byte n Frequency (MSB)	byte n+1 Frequency (LSB)

5.3.19 Frequency Resolution Data Field

The single-byte Frequency Resolution data field contains a value that when multiplied with Frequency Base data field forms the complete frequency value. The Resolution (HEX) value applies to Global, Channel, and Device Frequency Set messages. The Frequency Resolution field always contains one of the values listed in the following table.

Value (HEX)	Frequency Resolution	Value (HEX)	Frequency Resolution	Value (HEX)	Frequency Resolution	Value (HEX)	Frequency Resolution
0	Not Used	4	1 KHz	8	25 KHz	C	1 MHz
1	1 Hz	5	2 KHz	9	100 KHz	D	2 MHz
2	10 Hz	6	5 KHz	A	200 KHz	E	5 MHz
3	100 Hz	7	10 KHz	B	500 KHz	F	10 MHz

5.3.20 Gain Set Data Field

The single-byte Gain Set data field contains a two's compliment signed value, with the LSB equal to 1.0 dBm, providing a total field range of –128 to +127 dBm.

5.3.21 I/O Data Field

The single-byte I/O data field reports the logic state of a single Legacy Controller (Signal Data Converter) I/O driver. The field always contains one of the values listed in the following table.

Field Value (HEX)	Description
00	I/O pin = logic '0' (LOW)
01	I/O pin = logic '1' (HIGH)
02	I/O pin not configured (as input or output)
03	I/O pin is non-reporting output

5.3.22 I/O Number Data Field

The single-byte I/O Number data field supplies an integer number for use with multi-signal I/O devices, such as the Legacy Controller (Signal Data Converter). A unique I/O Number may be assigned to each (Legacy Controller) I/O driver. The I/O Number field has an unsigned range of 0 – 255. The number '0' is reserved, and is not assigned to an I/O signal.

5.3.23 I/O Type Data Field

The single-byte I/O Type data field configures Legacy Controller (Signal Data Converter) I/O drivers as inputs, outputs, or tri-state (disabled). The I/O Type field always contains one of the values listed in the following table. I/O configurations are limited by hardware capability. For example, an I/O driver (hardware) may support output or tri-state operation, but not be capable of operating as an input. The Legacy Controller outputs a Command Error message (paragraph 4.58) when Talk Mode is set to PEER (paragraph 5.3.46), and the radio attempts to configure an I/O driver to a non-supported configuration.

Field Value (HEX)	Description
00	Configure I/O driver as tri-stated or disabled
01	Configure I/O driver configured as output
02	Configure I/O driver configured as input

5.3.24 Input Select Data Field

The single-byte Input Select data field configures the peripheral to respond to Duplex (Transmit/Receive), Transmit Key, or Frequency Strobe inputs from Ethernet, or discrete input (hardwire) sources. The field always contains one of the values listed in the following table.

Field Value (HEX)	Mode	Description
00	Ethernet Control	Enables Ethernet port, and disables discrete input (Hardwire) port, as source of transmit key and duplex controls.
0F	Discrete input (Hardwire) Enabled	Enables discrete input (Hardwire) port, and disables Ethernet port, as source of transmit key and duplex controls.

5.3.25 Input Threshold Data Field

The single-byte Input Threshold data field sets the switching threshold of Legacy Controller (Signal Data Converter) I/O when configured as inputs. The field value defines the logic ‘0’/’1’ input threshold voltage level, and has an unsigned range of 0 - 255. Input voltages more positive than the threshold are interpreted as a logic ‘1’, and voltages more negative than the threshold are interpreted as a logic ‘0’. Field resolution (LSB weight) is defined in the applicable peripheral ICD.

5.3.26 Legacy Mode Select Data Field

The single-byte Legacy Mode Select data field configures a programmable device, such as the Signal Data Converter, to operate as command translator for one of multiple legacy equipment types. The field always contains one of the values shown in the following table.

Field Value (HEX)	Legacy Device Type
00	Not Used
01	AO-9277 Antenna Coupler
02	TD-1456 multiplexer
03	ARC-210
04-FF	Reserved

5.3.27 Multi-pole Switch Position Data Field

The single-byte Multi-pole Switch Position data field contains a value that represents a single switch position between 1 and 256. The field has an unsigned range of 0 to 255 where the 0x00 represents switch Position #1, 0xFF represents Position #256, etc.

5.3.28 Number of Channels Data Field

The single-byte Number of Channels data field contains a value that represents how many RF channels the reporting device can handle. The Number of Channels field has an unsigned range of 0 to 255. The value of ‘0’ indicates the reporting device supports a single ITU RF channel.

5.3.29 Output Current Data Field

The single-byte Output Current data field sets the maximum (source or sink) current drive level of Legacy Controller (Signal Data Converter) I/O when configured as outputs. The Output Current field must be set to one of the values listed in the following table.

Field Value (HEX)	Output Current Capability
00	I/O driver disabled, no drive current
01	± 8 mA drive current
02	± 25 mA drive current
04	± 50 mA drive current
10	± 100 mA drive current
20	± 500 mA drive current
40	± 1000 mA drive current

5.3.30 Output Voltage Data Field

The single-byte Output Voltage data field sets the maximum (positive, negative) voltage rail of Legacy Controller (Signal Data Converter) I/O when configured as outputs. The Output Voltage field value is referenced to zero volts, and has an unsigned range of 0 - 255. Field resolution (LSB weight) is described in the applicable peripheral device ICD.

5.3.31 Packet Count Data Field

The two-byte Packet Count data field provides a means to numerically track the elements contained in an Ethernet packet series such as software download. The field has a (hex) range of 0 through 65535. The upper 8 bits of the packet counter are located in the 'n' byte, the lower 8 bits are located in the 'n+1' byte. The field's generator maintains (resets, increments) the Packet Count value. When used as a counter, the Packet Count field starts with a value of '1'. When used as a 'Max-count' indicator, the field value is the absolute number of packets (to be) transferred. For example, if transferring 1000 packets, the counter is incremented from '1' to '1000' (1 – 3E8), and the max-count field is set to 1000 (3E8).

n Packet Count (MSB)	n+1 Packet Count (LSB)

5.3.32 Packet Status Data Field

The single-byte Packet Status data field reports the current download process status, based on the most recent received download message. The field always contains one of the values shown in the following table.

Field Value (HEX)	**Packet Status**
00	Download complete, display ASCII status
01	Download complete, do not display ASCII status
02	Restart transmission at last packet count, display ASCII status
03	Restart transmission at last packet count, do not display ASCII status
04	Display current ASCII status, continue with download.
05	Packet error. Resend packet
06	Transfer of download file complete, errors detected.
07 – FF	Reserved

5.3.33 Power Resolution Data Field

The single-byte Power Resolution data field indicates the resolution of data used in RF power commands and measurements, such as the PA Status Message (paragraph 4.49) Power In, Power Out, Power Reflected, and VSWR fields. Peripheral components default to 1 dBm resolution after power-on-reset (startup). Data resolution changes upon receipt of this field, in the Power Resolution command message (paragraph 4.75). Altered power resolution is not retained during power cycles. The Power Resolution field is always set a value listed in the following table.

Field Value (HEX)	Field Resolution
00	1 dB
01	0.5 dB
02	0.25 dB
03-FF	N/A

5.3.34 Reset Status Data Field

The single-byte Reset Status data field reports peripheral device reset status. The field always contains one of the values shown in the following table.

Field Value (HEX)	Reset Status Descriptions
00	Completed reset OK
01	Reset/startup failure, need help
02	Reset/startup failure, need help
03-FF	Reserved

5.3.35 Response Message Type Data Field

The single-byte Response Message Type data field defines the type response message to be returned to the network host by the addressed peripheral device. The field always contains one of the values shown in the following table.

Field Value (HEX)	Response Message Type
00	Not Used
01	Device Query Response (31H) – Long message
02	Device Query Response (32H) – Short message
03	Device Query Response (33H) – ASCII
04-FF	Reserved

5.3.36 RF Power – Signed, Fixed 0.5 dB Data Field

The single-byte RF Power – Signed, Fixed 0.5 dB data field configures peripheral RF power parameters such as PA input and output power controls. The field contains a signed value, with the LSB equal to 0.5 dBm. This provides a total field range of –64.0 to +63.5 dBm. Negative values are two’s compliment format.

5.3.37 RF Power – Signed, Fixed 1.0 dB Data Field

The single-byte RF Power – Signed, Fixed 1.0 dB data field configures peripheral RF parameters such as PA output power controls. The field contains a signed value, with the LSB equal to 1.0 dBm. This provides a total field range of -128 to +127 dBm. Negative values are two's compliment format.

5.3.38 RF Power – Signed, Programmable Data Field

The single-byte RF Power – Signed, Programmable data field contains a signed value. The LSB weight, listed in the following table, is determined by the most recent commanded Power Resolution value (paragraph 5.3.33). Negative values are two's compliment format.

Field Resolution	Signed Power Field Range
1 dB	-128 to +127
0.5 dB	-64 to +63
0.25 dB	-32 to +31

5.3.39 RF Power – Unsigned, Programmable Data Field

The single-byte RF Power – Unsigned, Programmable data field contains an unsigned value. The LSB weight, listed in the following table, is determined by the most recent commanded Power Resolution value (paragraph 5.3.33).

Field Resolution	Unsigned Power Field Range
1 dB	0 to 255 dB
0.5 dB	0 to 127 dB
0.25 dB	0 to 63 dB

5.3.40 RF Step –Signed Value Data Field

The single-byte RF Step Value data field contains a signed value with the LSB equal to 0.1 dB, providing a field range of –12.8 to +12.7 dB. Negative values are two's compliment format.

5.3.41 RFD Path (Channel) Data Field

The single-byte RFD Path (Channel) data field is reserved for system growth.

5.3.42 Simple Switch Position Data Field

The single-byte Simple Switch Position data field represents the state of a single-pole, single or double throw, switch. Field values and switch positions are described in the following table.

Field Value (HEX)	Switch Output Description
FE	Switch position #1, sets output to negative rail
00	Switch position #2, disables (tri-state) output
01	Switch position #3, sets output to positive rail

5.3.43 Switch Number Data Field

The single-byte Switch Number data field identifies the intended switch to be changed by Device Simple Switch or Device Multi-Pole Switch messages. The field can address any one of 256 different switches in a single device (0 = switch #1, 1 = switch #2, etc). The field value is set to ‘0’ for all devices that have a single switch.

5.3.44 SysCal Offset Data Field

The single-byte SysCal Offset data field contains an offset to adjust PA Status Response message, Power Out data (paragraph 4.49) during RF channel calibration (SysCal). The offset field contains a two’s compliment signed value, with the LSB equal to 0.1 dB. This provides a field range of –12.8 to +12.7 dB. Therefore, an field value of +12 has an offset value of +1.2 dB, –14 has an absolute value of –1.4 dB, etc. A positive field offset value indicates Power Out field data is lower than the actual transmitted power, a negative offset indicates Power Out data is greater than the actual transmitted power. The ITU adds SysCal Offset field value to Power Out field value to obtain actual transmitted power level.

5.3.45 SysCal Status Data Field

The single-byte SysCal Status data field indicates the calibration source of data contained in the PA Status Response message Power Out data field (paragraph 4.49). The field is set through the PA’s operator menu.

Field Value (HEX)	PA Cal Status (operator menu)	Description
00	NONE	Indicates the PA’s output power sensor is not calibrated, and that SycCal Offset data (field 27) is not to be used. To calculate actual transmitted power, ITU algorithms apply (adds) offsets to Power Out data (field 9) according to tuned frequency. Offset values are: 30 to 130 MHz = -0.39, 130 to 340 MHz = 2.5, and 340 to 400 MHZ = -2.0.
01	ITU	Indicates the SysCal Offset (field 27) value was entered through the PA’s operator menu. To calculate actual transmitted power, ITU algorithms apply (adds) the SysCal Offset field (paragraph 5.3.44) value to Power Out data (field 9).
02	FACTORY	Indicates the PA’s power sensor has been factory calibrated. ITU software uses Power Out field data as is, without application of any offsets.
03 to FF	N/A	Reserved

5.3.46 Talk Mode Data Field

The single-byte Talk Mode data field reports state of peripheral device talk mode. The field always contains one of the values listed in the following table.

Field Value (HEX)	Talk Mode	Description
00	Not Used	
01	PUPIL	Network device responds only when queried (default)
02	PEER	Network device freely talks on the bus
03	PEER FAULT	Network device talks when fault condition detected
04-FF	Reserved	

5.3.47 Tasking Message ID Data Field

The single-byte Tasking Message ID field reports the message ID that started the (now-complete) task. For example, the field would contain 0x06H when the device is reporting a completed frequency change, originated by a Device Frequency Set message.

5.3.48 Temperature Data Field

The single-byte Temperature data field contains a two's compliment signed value with an LSB equal to 1 degree. This provides a field range of +127 to -128 degrees C.

5.3.49 Time – Decimal Data Field

The two-byte Decimal Time data field sets the milli-second and micro-second fields of programmable timer/counters. The HEX format field has a decimal range of 0 to 999 milli-seconds (0x0000 – 0x03E7).

Byte n Decimal Time (MSB)	byte n+1 Decimal Time (LSB)

5.3.50 Time – Hour Data Field

The single-byte Hour Time data field sets the base-ten Hour value of a programmable timer/counter. The HEX format field has a range of 0 to 255 (0x00 – 0xFF) hours.

5.3.51 Time – Minute Data Field

The single-byte Minute Time data field sets the base-ten Minute value of a programmable timer/counter. The HEX format field has range of 0 to 59 (0x00 – 0x3B) minutes.

5.3.52 Vender Download Data Field

The 1492-byte maximum size Vender Download data field contains binary encoded program instructions and configuration parameters. A program download sequence is a sequence of multiple data packets. Download details are contained in applicable network device interface control documents.

5.3.53 Vender Download Status Data Field

The 1493-byte maximum size Vender Download Status data field contains real-time text information applicable to the download process. Download details are contained in applicable network device interface control documents.

5.3.54 Waveform Parameters Data Field

The multiple-byte Waveform Parameters data field is reserved for system growth.

5.3.55 Waveform Modes Data Field

The single-byte Waveform Modes data field is reserved for future system growth. Release note: as of 6.3.1.1, the Waveform Modes data field not used by any of External RF network devices.

Field Value (HEX)	Waveform Mode	Description
0-FF	Reserved	Reserved for system growth

5.3.56 Waveform Type Data Field

The single-byte Waveform Type, also known as Waveform Power Ratio (WPR) or Peak Power Ratio (PPR), data field, identifies the waveform modulation type. RF channel components may use this identifier to configure peak-power detection monitors for proper operation with the waveform.

Release Notes:

Application	DMR Release	Summary
100W, 200W, 100W-A nonALC	6.3.1.1	Values 0 through 2 have unique functionality. All other values have same functionality. See 100W, 200W PA ICD for details
100W-A, ALC capable	6.3.1.1	Values 0 through 4 configure the PA for non amplitude operation. Values 5 through 14 configure the PA for AM operation
500W	6.4.0.2	Not used

Field Value (HEX)	WPR (dB headroom)	Common Modulation Type	Description
00	1:1, (0 dB)	Constant Amplitude	Indicates the RF channel is configured for constant amplitude waveform such as FM, FSK, PSK.
01	1:1, (0 dB)	Pulsed, constant amplitude	Indicates the RF channel is configured for constant amplitude pulsed waveform such as Link-4A or SATCOM 183.
02	1:1, (0 dB)	Hopping, constant amplitude	Indicates the RF channel is configured for constant amplitude hopping waveform such as SINCGARS FH.
03	1:1, (0.5 dB)	SBPSK	Indicates the RF channel is configured for a constant amplitude waveform having a very low AM component such as SATCOM SBPSK 16K.
04	1:1, (2 dB)	BPSK 16K, QPSK 16K	Indicates the RF channel is configured for a constant amplitude waveform having a low AM component such as SATCOM BPSK 16K, QPSK 16K.
05	2:1, (3 dB)	Low headroom AM	Indicates the radio is configured for a near-constant (low) amplitude modulated waveform.
06	4:1, (6 dB)	AM	Indicates the RF channel is configured for a standard amplitude modulated waveform.
07	4:1, (6 dB)	“Active” AM	Indicates the RF channel is configured for a pulsing amplitude modulated waveform.
0A	10:1, (10 dB)	High headroom	Indicates the RF channel is configured for a “high” headroom amplitude modulated waveform such as Quadrature Amplitude Modulation (QAM).
14	100:1, (20 dB)	Extra High headroom waveform	Indicates the RF channel is configured for an “extra high” headroom amplitude modulated waveform such as single side band (SSB).
08, 09, 0B - 13, 15 - FF	Reserved	Reserved	Reserved for system growth

5.3.57 Filter Fault Code

The single-byte Filter Fault Code data field reports the numeric value of fault conditions detected by the OA-9277A and TD-1456 RF coupler. The filter fault code is reported by the Signal Data Converter. The Filter Fault Code field contains an unsigned value with a range of 0 – 255.

6 Appendix A: Abbreviations and Acronyms

The following table lists the abbreviations and acronyms used in this document.

Term	Definition
ALC	Automatic (RF power) level control
ASCII	American Standard Code for Information Interchange
BIT	Built-in-test
BPSK	Binary Phase-Shift Keying modulation
COTS	Commercial-Off-The-Shelf
dB	Decibel
dBm	Absolute RF power, referenced to 1 milli-watt
DMR	Digital Modular Radio
FCS	Frame check sequence
FH	Frequency hop(ing)
HEX	Hexidecimal (base 16) number, represented as 0xNN
HF	High (RF) Frequency
HMI	Human/Machine Interface
(H)PA	(High) Power RF Amplifier
I/O	Input / output
IC	Interference canceller
ICD	Interface control document
IEEE	Institute of Electrical and Electronics Engineers
INP PWR	Input (RF) power
ITU	(DMR) information transfer unit
KHz	Kilo-hertz
LAN	Local area network
LLC	Logical Link Control
LRU	Line replaceable unit
LSB	Least significant byte
MHz	Mega-hertz
MSB	Most significant byte
MAC	Medium Access Control
Msec	Milli-second
QPSK	Quadrature Phase-Shift Keying modulation

Term	Definition
PTT	Push-to-talk
PPR	Peak power ratio
RACU	Receive Automatic Canceller Unit
RF	Radio Frequencies
RFD	Radio Frequency Device
SPDT	Single pole – dual throw
SBPSK	Shaped Binary Phase-Shift Keying modulation
SPST	Single pole – single throw
T/R	Transmit / Receive
μsec	Micro-second
UHF	Ultra High (RF) Frequency
VHF	Very High (RF) Frequency
VSWR	Reflected (RF) power
WPR	(RF) Waveform power ratio
Xmit	(RF) transmit